and the Settlement.[13] The Commission has considered all the comments and interventions in determining whether, and under what conditions, to issue this relicense.

PROJECT DESCRIPTION

The Raquette River, with a drainage basin of 1,269 square miles, originates in the Adirondack Mountains, flows generally north-northwest for more than 120 miles, and empties into the St. Lawrence River near Massena, New York.[14] Most of the basin is sparsely populated, with much of the land forested and brushland. The region's economy depends primarily on recreational tourism and timber-based industries.

The project consists of four developments (from upstream to downstream): Higley, Colton, Hannawa, and Sugar Island. The four developments have a total installed capacity of 47,073 kW and are all located in an 11-mile reach of the Raquette River commencing 38 miles above its confluence with the St. Lawrence River.

The Higley development includes a 34-foot-high dam with 3-foot-high flashboards, two flood gates, a trashrack, two waste gates; a 742-acre reservoir; a 160-foot-long, 50-foot-wide intake; and a powerhouse containing three generating units with a total capacity of 4,972 kW. On October 14, 2001, one of the generating units ceased operation due to turbine failure. Erie proposes to construct a new 13-foot-diameter, 225-foot-long steel intake pipeline and a new powerhouse containing one generating unit with a capacity of 7,300 kW. The existing powerhouse will be retired.

The Colton development includes a 27-foot-high dam with 2-foot-high flashboards, a log flume, a trash gate, and a gated spillway; a 195-acre-reservoir; an 11,090-foot-long steel pipeline; three penstocks; and a powerhouse containing three generating units with a total capacity of 30,101 kW.

The Hannawa development has a 38-foot-high dam with 3.5-foot-high flashboards, a log chute, a Taintor gate, and a sluice gate; a 204-acre reservoir; a 2,700-foot-long canal; two penstocks; and a powerhouse containing two generating units with a total capacity of 7,200 kW.

---

[13]The Mountain Club, Interior, and NYSDEC filed comments in support of this recommendation.

[14]The Raquette River is a navigable waterway of the United States. 8 FPC 569 (1949).

The Sugar Island development has a 37-foot-high dam with two Taintor gates; a 29-acre reservoir; an intake structure with trash racks and a headgate; a 4,700-foot-long steel pipeline; two penstocks; and a powerhouse containing two generating units with a total capacity of 4,800 kW.[15]

As currently licensed, and as proposed to be relicensed, these developments, except for Higley, are operated run-of-river with pondage mode using releases from the Carry Falls and the Upper Raquette River Projects.[16] The Higley development operates as a re-regulating development to provide steadier flows for the downstream hydropower developments.

WATER QUALITY CERTIFICATION

Under Section 401(a)(1) of the Clean Water Act (CWA),[17] the Commission may not issue a license for a hydroelectric project unless the state water quality certifying agency has issued a water quality certification for the project or has waived certification. Section 401(d) of the CWA provides that state certification shall become a condition of any federal license or permit that is issued.[18] Only a reviewing court can revise or delete these conditions.[19]

NYSDEC issued water quality certification for the Middle Raquette Project on June 11, 1998.[20] As discussed in the lead order, the certification includes standard terms and conditions and the "terms and conditions of the . . . Settlement."[21] We have appended to this license the water quality certification, which includes the standard terms

---

[15]A more detailed project description is contained in ordering paragraph B(2).

[16]This means that the licensee uses/releases flows received from upstream developments and in addition may use/release water stored in the reservoir (pondage), subject to drawdown limitations.

[17]33 U.S.C. § 1341 (a)(1).

[18]33 U.S.C. 1341(d).

[19]See American Rivers v. FERC, 129 F.3d. 99 (D.C. Cir. 1997).

[20]The certification was filed by the licensee on June 22, 1998.

[21]See Water Quality Certification section of lead order.

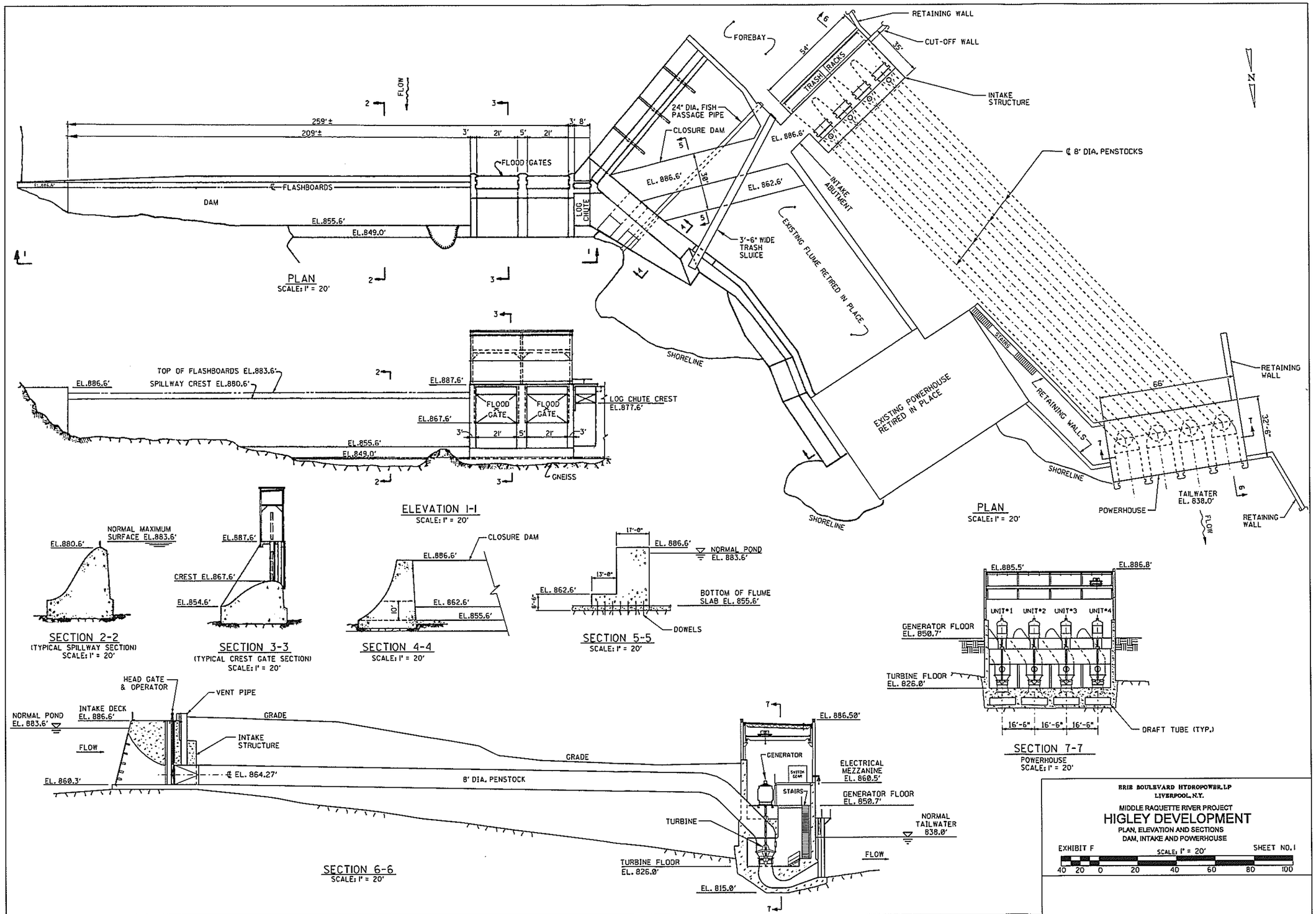

NO.	DATE	DESCRIPTION OF ISSUE OR REVISION	DR.	CK.	APP.
6	6/9/06	APPROVED AS-BUILT (ISSUED 5/1/06)	PA	TMS	TMS
5	10/28/05	AS BUILT- REDEVELOPED PROJECT	PA	TMS	TMS
4	3/27/02	SUBMITTED FOR CONSTRUCTION	PA	TMS	TMS
3	2/11/93	LIC. APP. ACCEPTED FOR FILING	—	DWM	—
2	10/28/91	LICENSE APPLICATION	PRW		SSH
1	12/10/90	DRAFT APPLICATION	KIM	TMS	JLS

ORIGINAL ISSUE DATE

FILE NAME F12320.DGN F12320.CIT

FERC NUMBER 2320-1016

ERIE BOULEVARD HYDROPOWER, LP
LIVERPOOL, N.Y.

MIDDLE RAQUETTE RIVER PROJECT

HIGLEY DEVELOPMENT

PLAN, ELEVATION AND SECTIONS
DAM, INTAKE AND POWERHOUSE

EXHIBIT F — SCALE: 1" = 20' — SHEET NO. 1

40 20 0 20 40 60 80 100

FERC NO. 2320-1016

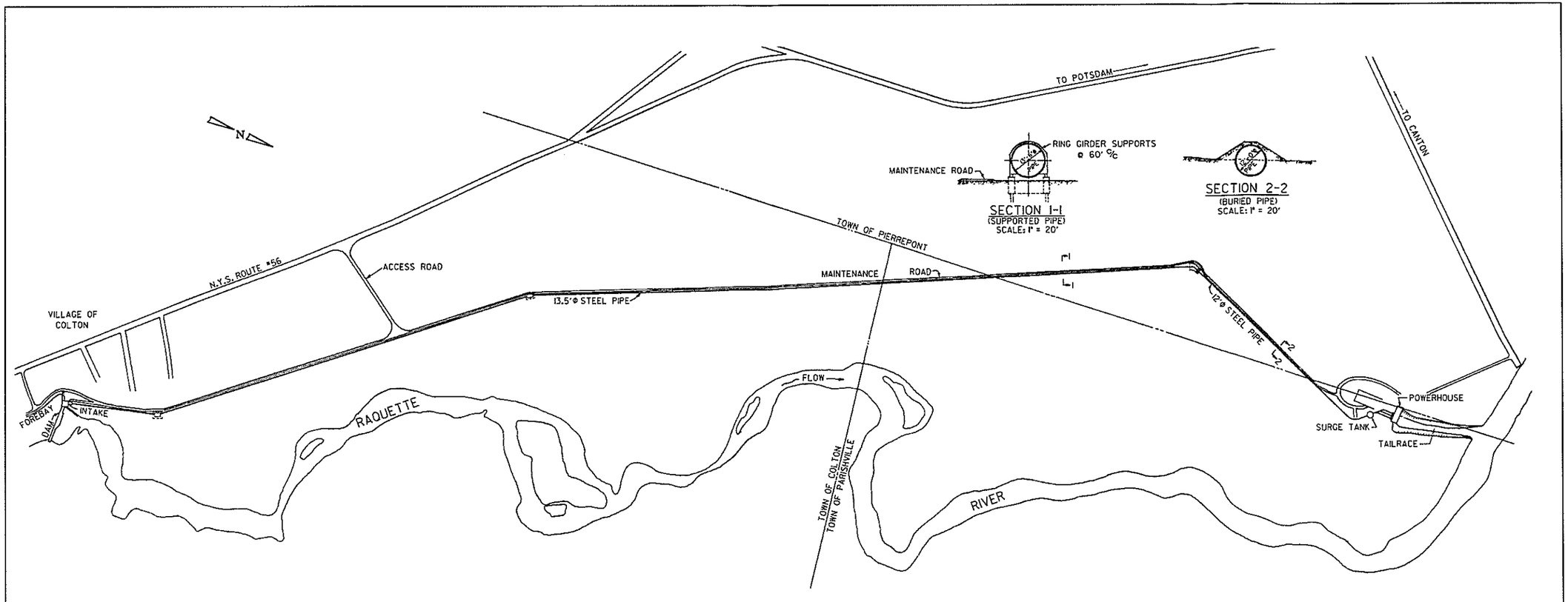

PLAN
SCALE: 1" = 400'

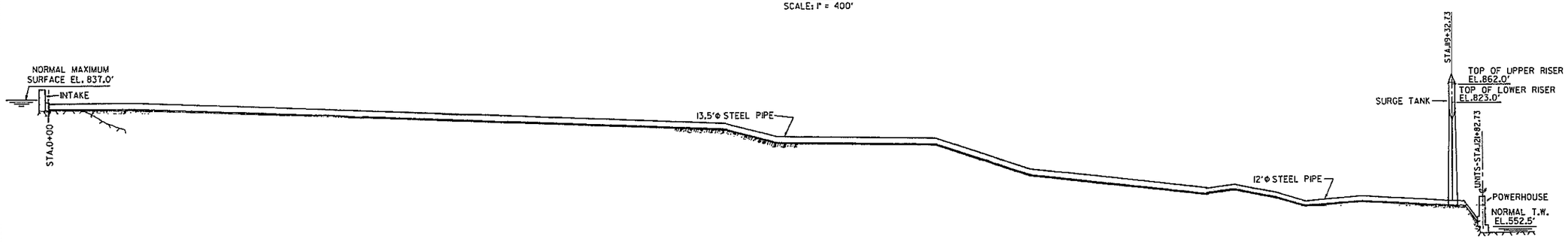

PROFILE
SCALES: HORIZ.: 1" = 400'
VERT.: 1" = 100'

ERIE BOULEVARD HYDROPOWER, LP
LIVERPOOL, N.Y.
MIDDLE RAQUETTE RIVER PROJECT
COLTON DEVELOPMENT
GENERAL PLAN AND PROFILE

EXHIBIT F — SCALE: 1" = 400' — SHEET NO. 2

400 200 0 400 800 1200 1600 2000

NO.	DATE	DESCRIPTION OF ISSUE OR REVISION	DR.	CK.	APP.
4	2/13/02	ORDER ISSUING NEW LICENSE	PA	TMS	TMS
3	2/18/93	LIC. APP. ACCEPTED FOR FILING	—	DWM	—
2	10/28/91	LICENSE APPLICATION	PRM	TMS	SSH
1	12/10/90	DRAFT APPLICATION	KIM	TMS	JLS

ORIGINAL ISSUE DATE

FILE NAME: F22320.DGN, F22320.CIT

FERC NUMBER: 2320-1008

FERC NO. 2320-1008

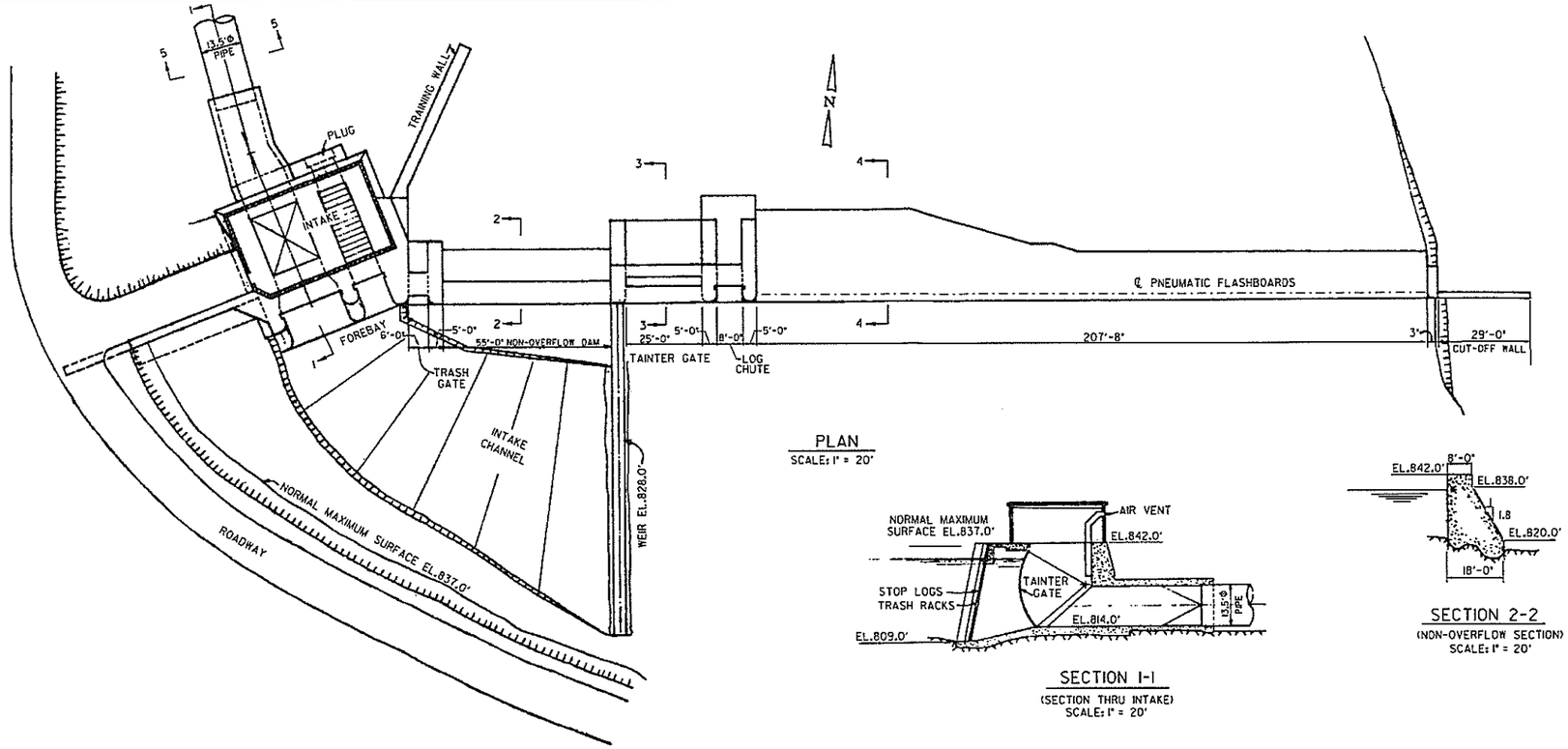

PLAN
SCALE: 1" = 20'

SECTION 1-1
(SECTION THRU INTAKE)
SCALE: 1" = 20'

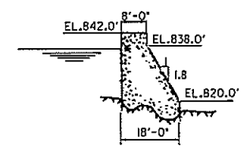

SECTION 2-2
(NON-OVERFLOW SECTION)
SCALE: 1" = 20'

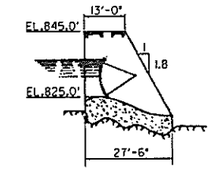

SECTION 3-3
(TAINTER GATE SECTION)
SCALE: 1" = 20'

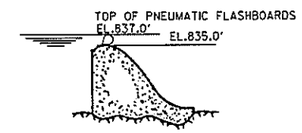

SECTION 4-4
(SPILLWAY SECTION)
SCALE: 1" = 20'

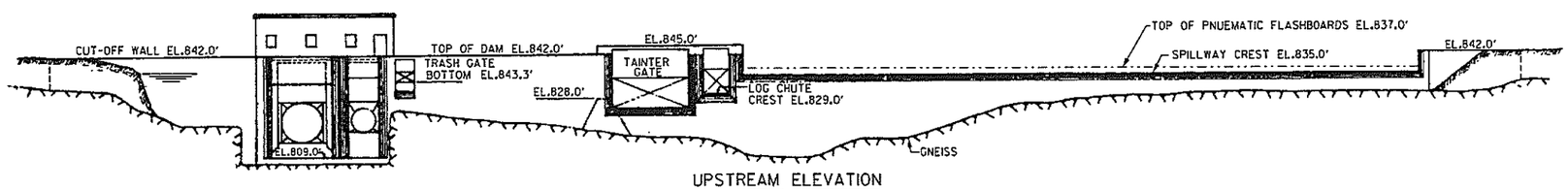

UPSTREAM ELEVATION
SCALE: 1" = 20'

HRIB BOULEVARD HYDROPOWER, LP
LIVERPOOL, N.Y.

MIDDLE RAQUETTE RIVER PROJECT

COLTON DEVELOPMENT

PLAN, ELEVATION AND SECTIONS
DAM AND INTAKE

EXHIBIT F — SCALE: 1" = 20' — SHEET NO. 3

20 10 0 20 40 60 80 100

NO.	DATE	DESCRIPTION OF ISSUE OR REVISION	DR.	CK.	APP.
4	2/13/02	ORDER ISSUING NEW LICENSE	PA	TMS	TMS
3	2/18/93	LIC. APP. ACCEPTED FOR FILING	—	DWM	—
2	10/28/91	LICENSE APPLICATION	PRW	TMS	SSH
1	12/10/90	DRAFT APPLICATION	KW	TMS	JLS

ORIGINAL ISSUE DATE

FILE NAME: F32320.DGN, F32320.CIT

FERC NUMBER: 2320-1009

FERC NO. 2320-1009

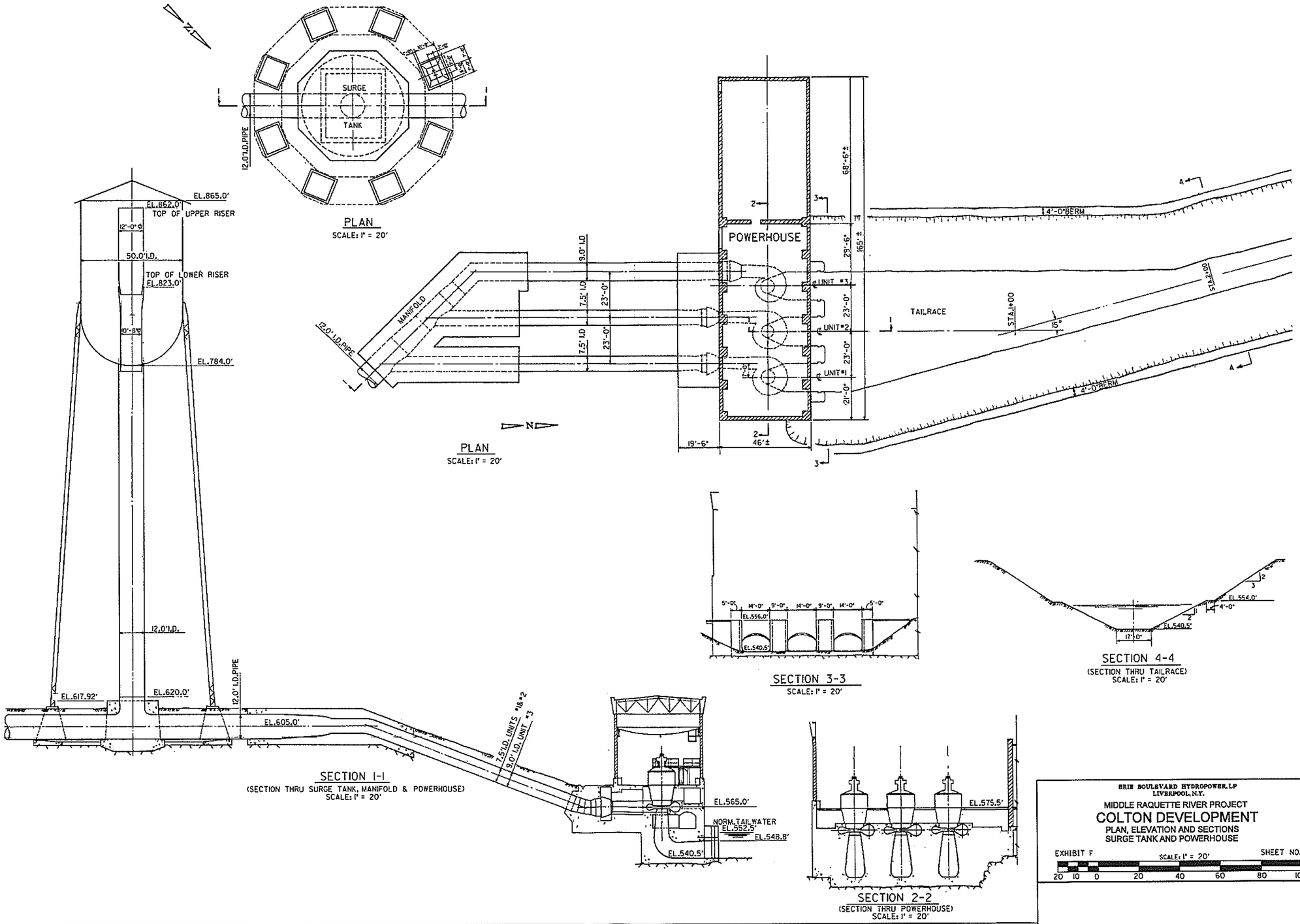

ERIE BOULEVARD HYDROPOWER, LP
LIVERPOOL, N.Y.

MIDDLE RAQUETTE RIVER PROJECT

COLTON DEVELOPMENT

PLAN, ELEVATION AND SECTIONS
SURGE TANK AND POWERHOUSE

EXHIBIT F — SCALE: 1" = 20' — SHEET NO. 4

20 10 0 20 40 60 80 100

NO.	DATE	DESCRIPTION OF ISSUE OR REVISION	DR.	CK.	APP.
4	2/13/02	ORDER ISSUING NEW LICENSE	PA	TMS	TMS
3	2/11/93	LIC. APP. ACCEPTED FOR FILING	—	DRM	—
2	10/28/91	LICENSE APPLICATION	KIW	TMS	SSH
1	12/10/90	DRAFT APPLICATION	KIW	TMS	J.S

ORIGINAL ISSUE DATE

FILE NAME: F42320.DGN, F42320.CIT

FERC NUMBER: 2320-1010

FERC NO. 2320-1010

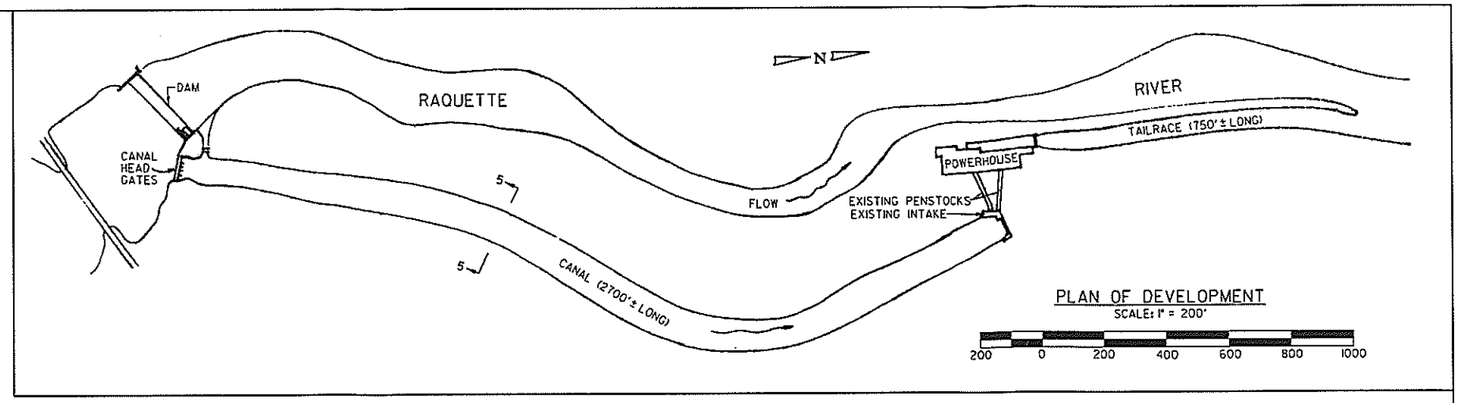

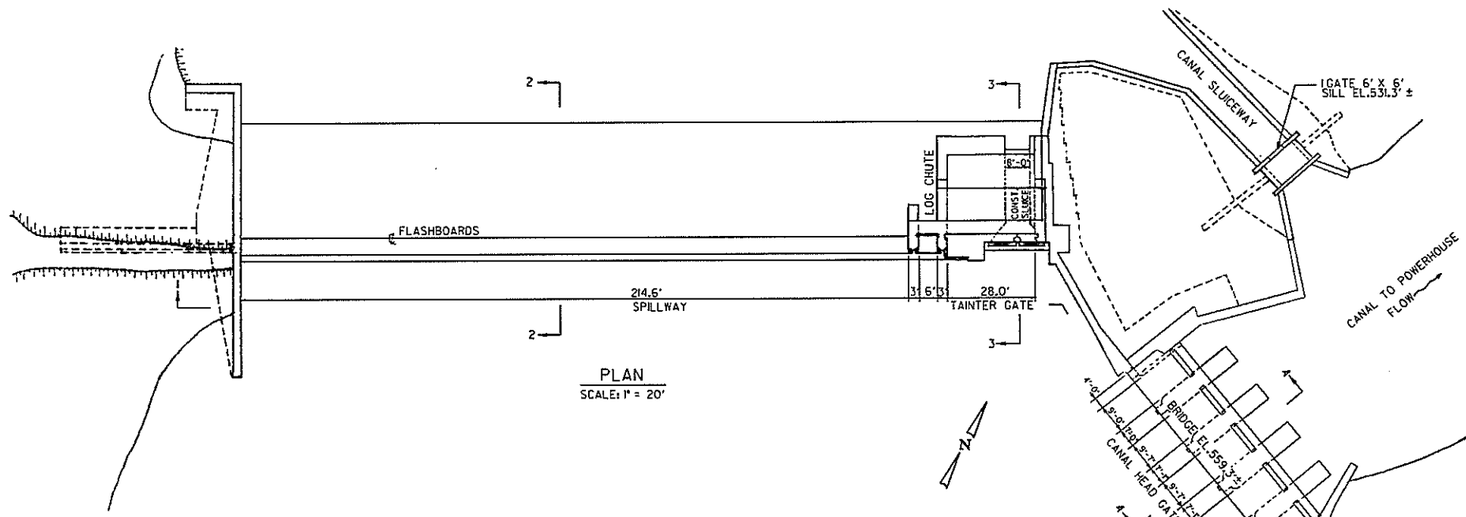

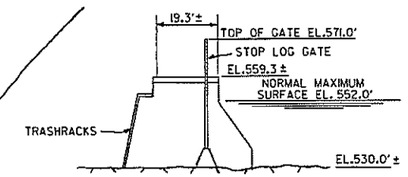

SECTION 4-4
(THRU CANAL HEAD GATES)
SCALE: 1" = 20'

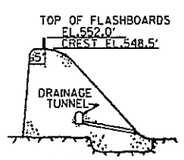

SECTION 2-2
(THRU SPILLWAY)
SCALE: 1" = 20'

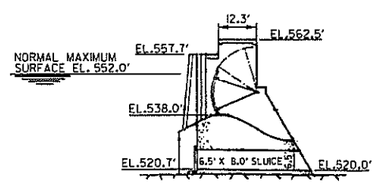

SECTION 3-3
(THRU TAINTER GATE)
SCALE: 1" = 20'

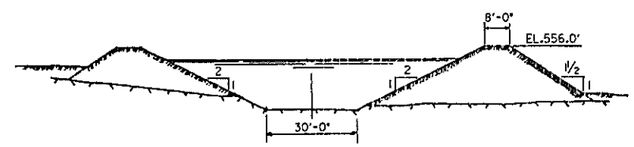

SECTION 5-5
(TYPICAL THRU CANAL)
SCALE: 1" = 20'

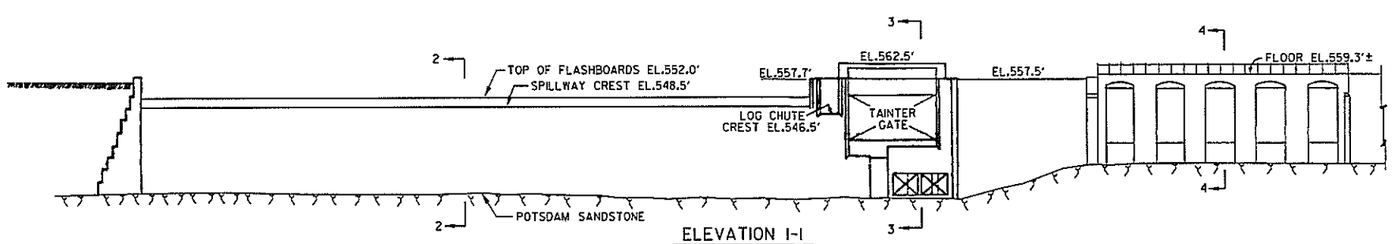

ELEVATION 1-1
(UPSTREAM ELEVATION)
SCALE: 1" = 20'

NO.	DATE	DESCRIPTION OF ISSUE OR REVISION	DR.	CK.	APP.	NO.	DATE	DESCRIPTION OF ISSUE OR REVISION	DR.	CK.	APP.	NO.	DATE	DESCRIPTION OF ISSUE OR REVISION	DR.	CK.	APP.
4	2/13/02	ORDER ISSUING NEW LICENSE	PA	TMS	TMS												
3	2/8/93	LIC. APP. ACCEPTED FOR FILING	—	DWM	—												
2	10/28/91	LICENSE APPLICATION	PRM	TMS	SSH												
1	12/10/90	DRAFT APPLICATION	KIM	TMS	JLS												

ORIGINAL ISSUE DATE

FILE NAME F52320.DGN F52320.CIT

FERC NUMBER 2320-101

BRIE BOULEVARD HYDROPOWER, LP
LIVERPOOL, N.Y.

MIDDLE RAQUETTE RIVER PROJECT

HANNAWA DEVELOPMENT

PLAN, ELEVATION AND SECTIONS
DAM, CANAL INTAKE, AND CANAL

EXHIBIT F — SCALE: 1" = 20' — SHEET NO. 5

20 10 0 20 40 60 80 100

FERC NO. 2320-101

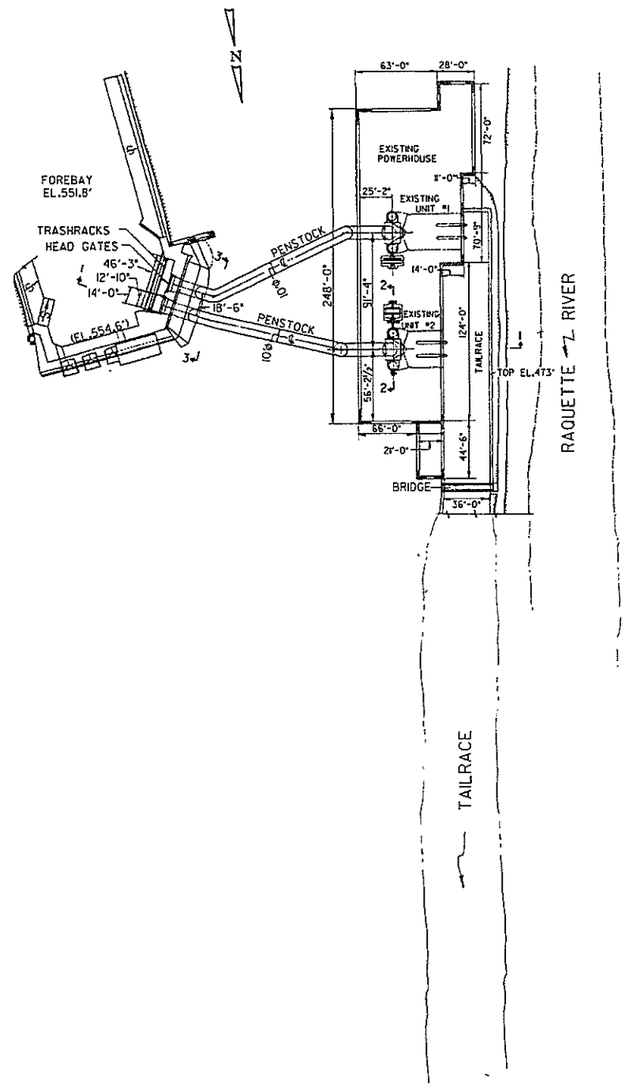

PLAN
SCALE: 1" = 20'

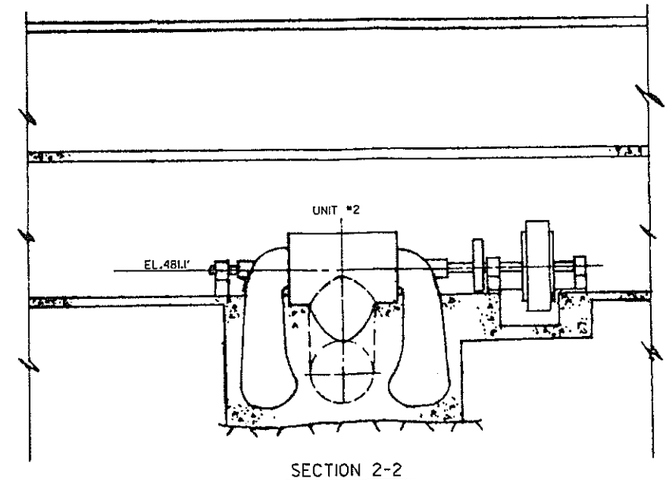

SECTION 2-2
SCALE: 1" = 10'

SCALE: 1" = 10'
10 5 0 10 20 30 40 50

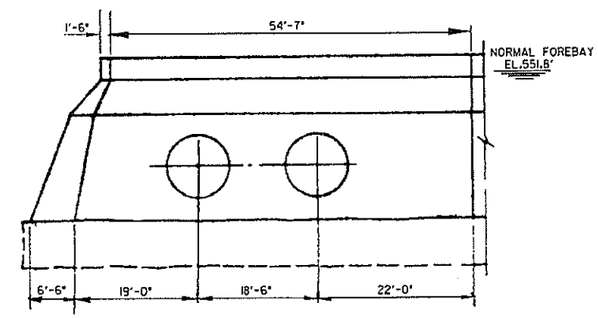

SECTION 3-3
SCALE: 1" = 10'

ERIE BOULEVARD HYDROPOWER, LP
LIVERPOOL, N.Y.

MIDDLE RAQUETTE RIVER PROJECT

HANNAWA DEVELOPMENT

PLAN, ELEVATION AND SECTIONS
FOREBAY, INTAKE, PENSTOCKS & POWERHOUSE

EXHIBIT F — SCALE: 1" = 20' — SHEET NO. 6

20 10 0 20 40 60 80 100

NO.	DATE	DESCRIPTION OF ISSUE OR REVISION	DR.	CK.	APP.
4	2/13/02	ORDER ISSUING NEW LICENSE	PA	TMS	TMS
3	2/18/93	LIC. APP. ACCEPTED FOR FILING	—	DWM	—
2	10/28/91	LICENSE APPLICATION	KIW	TMS	SSH
1	12/10/90	DRAFT APPLICATION	KIW	TMS	JLS

ORIGINAL ISSUE DATE

FILE NAME: F62320.DGN, F62320.CIT

FERC NUMBER: 2320-1012

FERC NO. 2320-1012

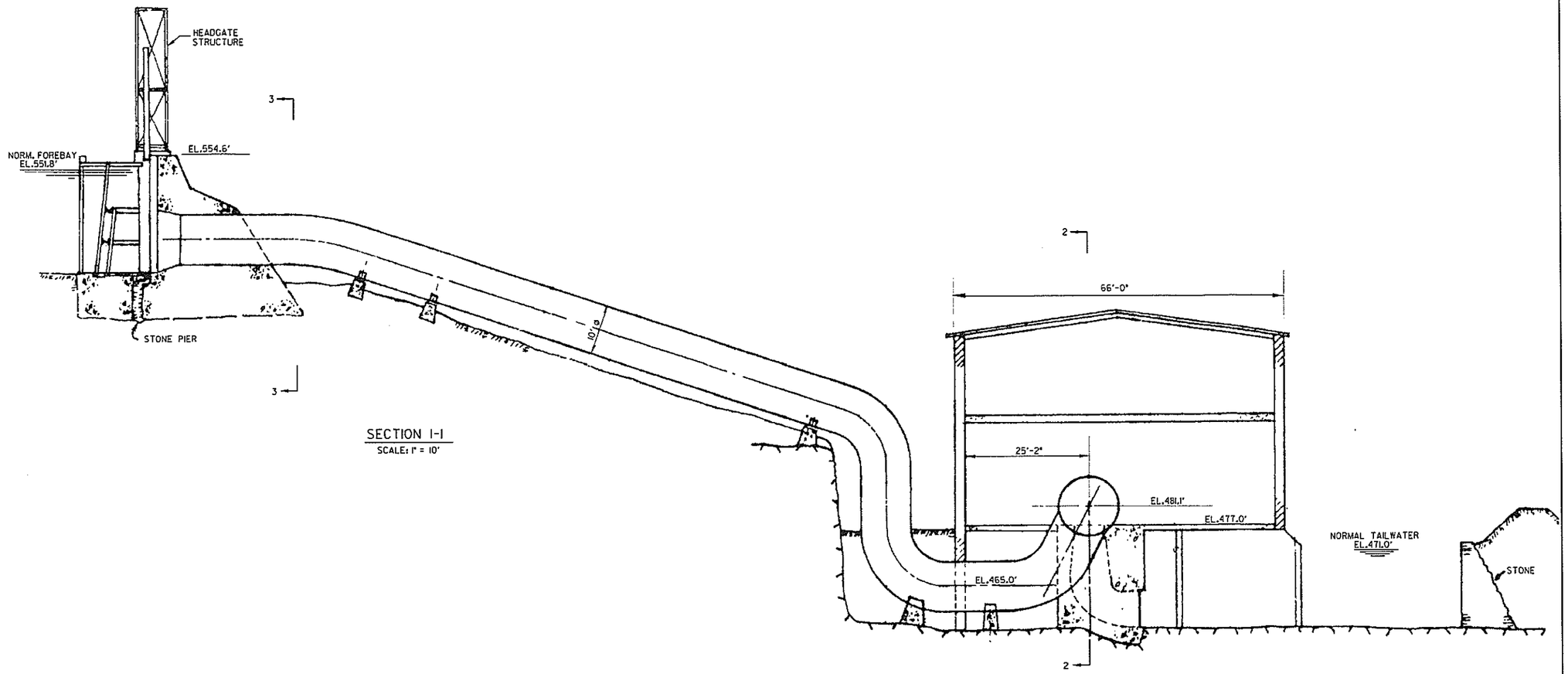

SECTION 1-1
SCALE: 1" = 10'

ERIE BOULEVARD HYDROPOWER, LP
LIVERPOOL, N.Y.

MIDDLE RAQUETTE RIVER PROJECT

HANNAWA DEVELOPMENT

SECTION OF FORBAY, INTAKE, PENSTOCKS & POWERHOUSE

EXHIBIT F — SCALE: 1" = 20' — SHEET NO. 7

20 10 0 20 40 60 80 100

NO.	DATE	DESCRIPTION OF ISSUE OR REVISION	DR.	CK.	APP.
4	2/13/02	ORDER ISSUING NEW LICENSE	PA	TMS	TMS
3	2/8/93	LIC. APP. ACCEPTED FOR FILING	—	DMM	—
2	10/28/91	LICENSE APPLICATION	KIM	TMS	SSH
1	12/10/90	DRAFT APPLICATION	KIM	TMS	JLS

ORIGINAL ISSUE DATE

FILE NAME: F12320.DGN, F12320.CIT

FERC NUMBER: 2320-1013

FERC NO. 2320-1013

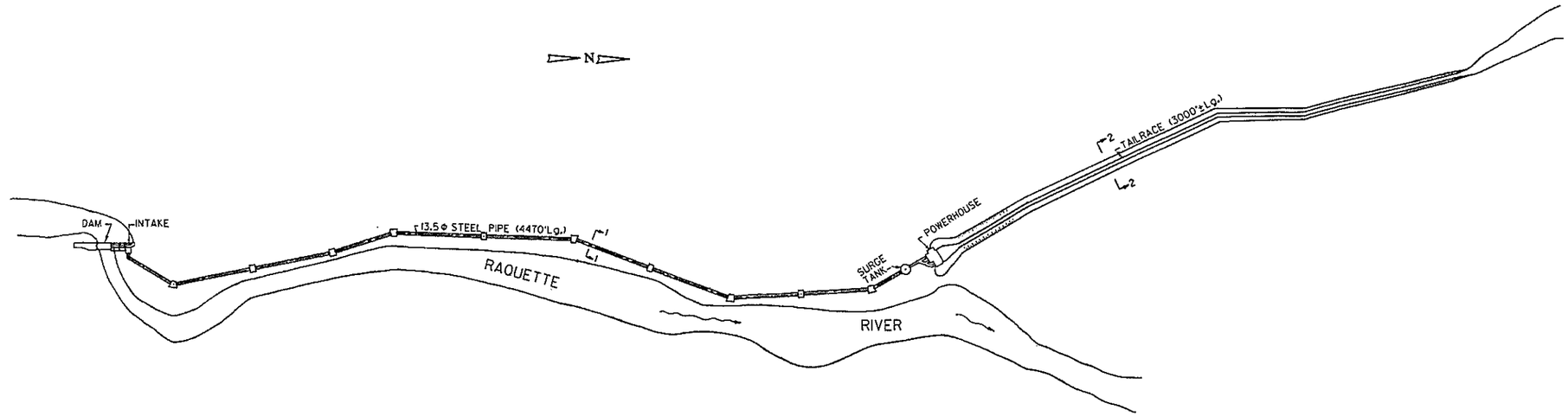

PLAN
SCALE: 1" = 300'

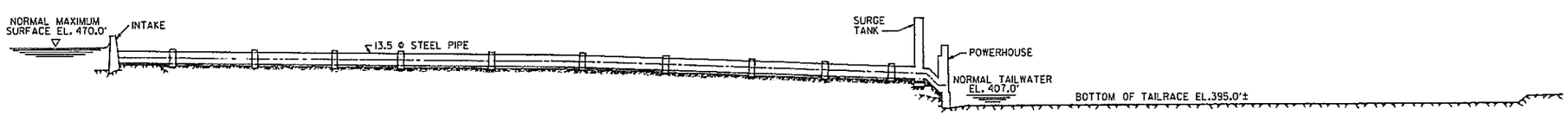

PROFILE
SCALES: HORIZONTAL 1" = 300'
VERTICAL 1" = 60'

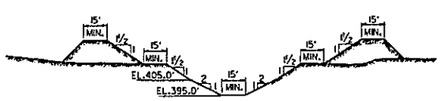

SECTION 2-2
(TYPICAL FOR TAILRACE)
SCALE: 1" = 40'

SCALE: 1" = 40'
40 20 0 40 80 120 160 200

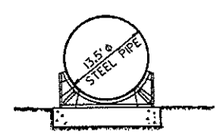

SECTION 1-1
(TYPICAL AT PIPE SUPPORT)
SCALE: 1" = 10'

10 5 0 10 20 30 40 50

ERIE BOULEVARD HYDROPOWER, LP
LIVERPOOL, N.Y.

MIDDLE RAQUETTE RIVER PROJECT

SUGAR ISLAND DEVELOPMENT

GENERAL PLAN AND PROFILE

EXHIBIT F — SCALE: 1" = 300' — SHEET NO. 8

300 0 300 600 900 1200 1500

NO.	DATE	DESCRIPTION OF ISSUE OR REVISION	DR.	CK.	APP.
4	2/13/02	ORDER ISSUING NEW LICENSE	PA	TMS	TMS
3	2/18/93	LIC. APP. ACCEPTED FOR FILING	—	DWM	—
2	10/28/91	LICENSE APPLICATION	KIN	TMS	SSH
1	12/20/90	DRAFT APPLICATION	KIN	TMS	JLS

ORIGINAL ISSUE DATE

FILE NAME: F82320.DGN, F82320.CIT

FERC NUMBER: 2320-1014

FERC NO. 2320-1014

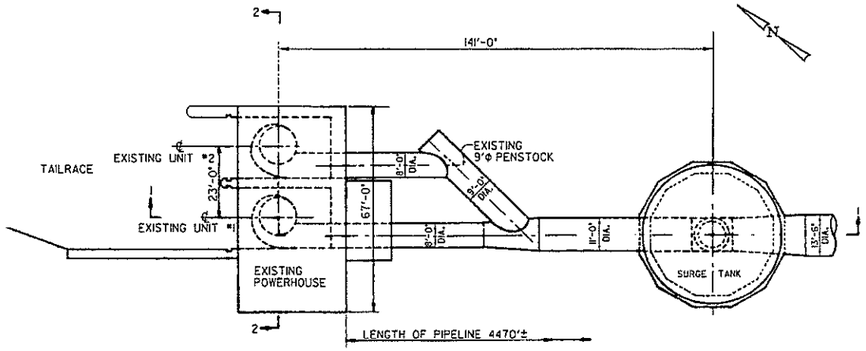

PLAN
SCALE: 1" = 20'

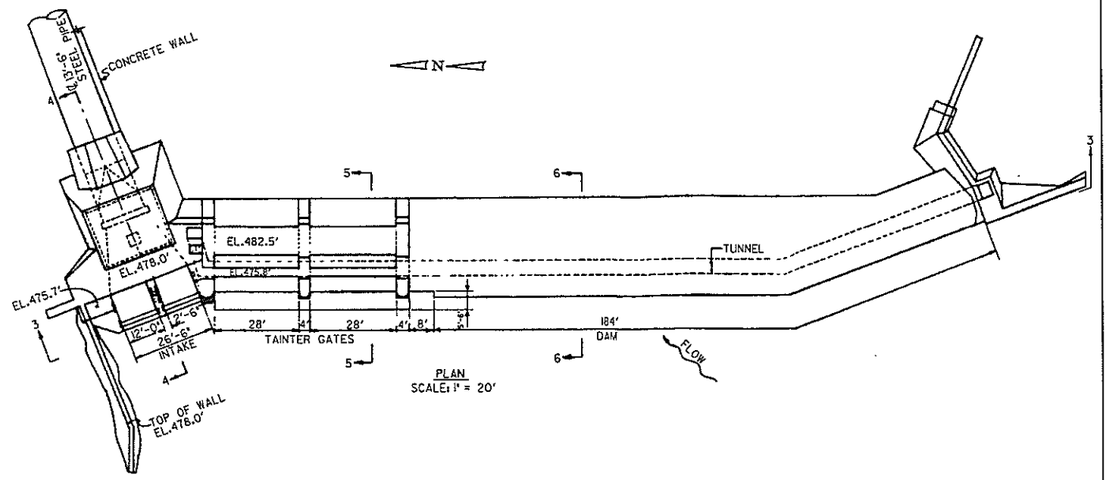

PLAN
SCALE: 1" = 20'

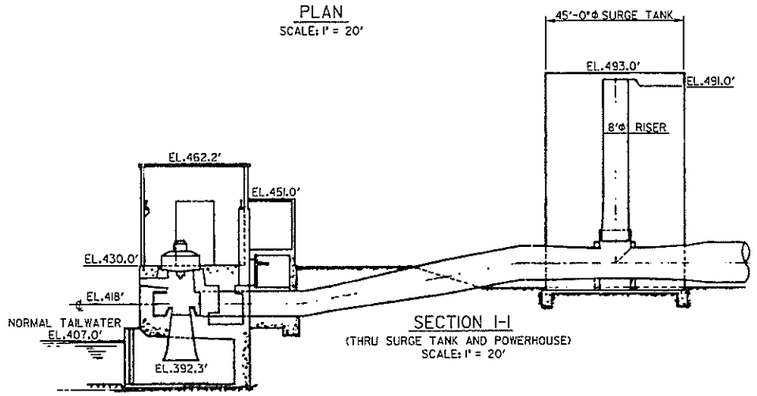

SECTION 1-1
(THRU SURGE TANK AND POWERHOUSE)
SCALE: 1" = 20'

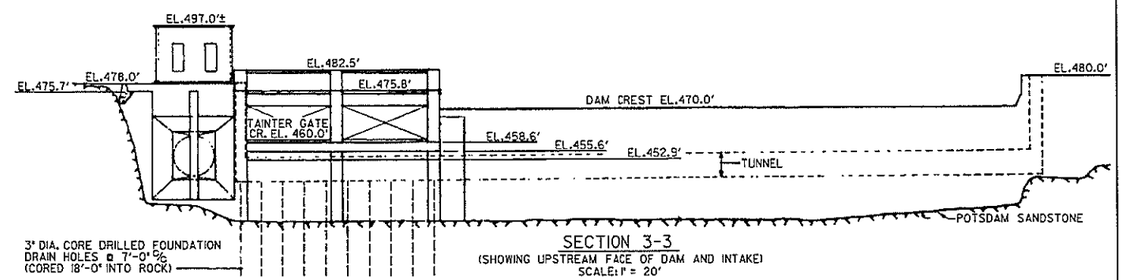

SECTION 3-3
(SHOWING UPSTREAM FACE OF DAM AND INTAKE)
SCALE: 1" = 20'

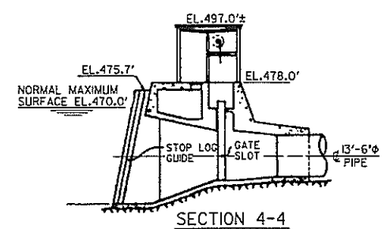

SECTION 4-4
(THRU INTAKE)
SCALE: 1" = 20'

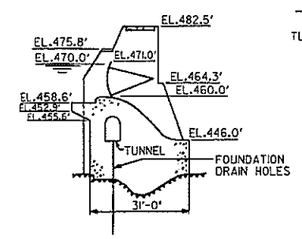

SECTION 5-5
(THRU TAINTER GATE)
SCALE: 1" = 20'

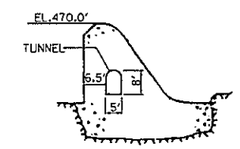

SECTION 6-6
(THRU THE DAM)
SCALE: 1" = 20'

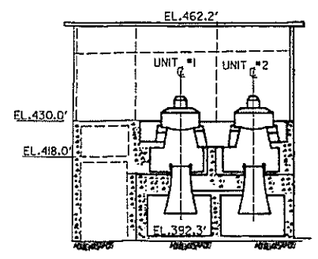

SECTION 2-2
(THRU POWERHOUSE)
SCALE: 1" = 20'

ERIE BOULEVARD HYDROPOWER, LP
LIVERPOOL, N.Y.

MIDDLE RAQUETTE RIVER PROJECT

SUGAR ISLAND DEVELOPMENT

PLAN AND SECTIONS
DAM, SURGE TANK AND POWERHOUSE

EXHIBIT F — SCALE: 1" = 20' — SHEET NO. 9

20 10 0 20 40 60 80 100

NO.	DATE	DESCRIPTION OF ISSUE OR REVISION	DR.	CK.	APP.
4	2/13/02	ORDER ISSUING NEW LICENSE	PA	TMS	TMS
3	2/3/93	LIC. APP. ACCEPTED FOR FILING	—	DWM	—
2	10/28/91	LICENSE APPLICATION	KIW	TMS	SSH
1	12/10/90	DRAFT APPLICATION	KIW	TMS	JLS

ORIGINAL ISSUE DATE

FILE NAME: F92320.DGN, F92320.CIT

FERC NUMBER: 2320-1015

FERC NO. 2320-1015

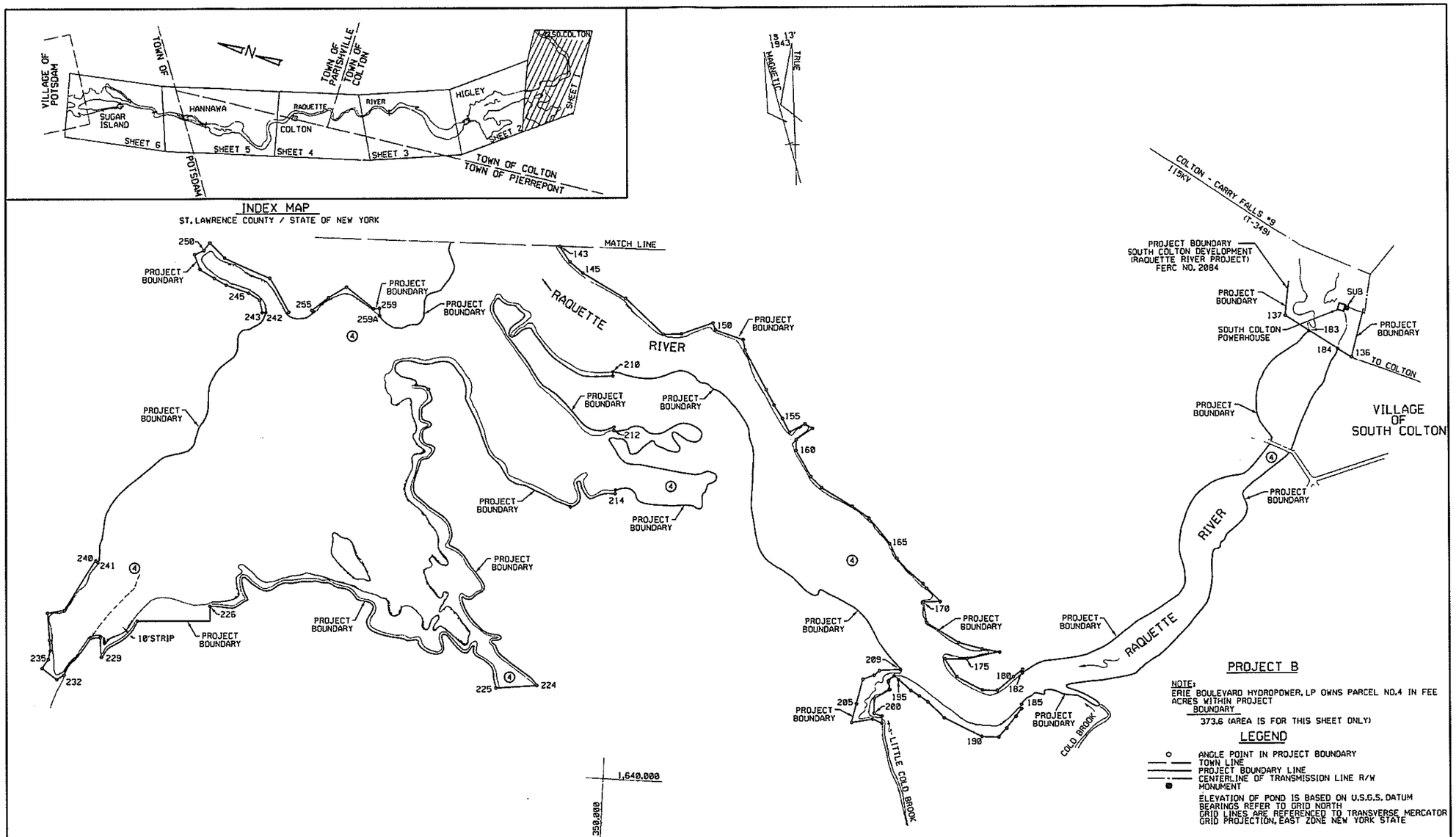

PROJECT B

NOTE:
ERIE BOULEVARD HYDROPOWER, LP OWNS PARCEL NO.4 IN FEE
ACRES WITHIN PROJECT BOUNDARY
373.6 (AREA IS FOR THIS SHEET ONLY)

LEGEND

- ANGLE POINT IN PROJECT BOUNDARY
- TOWN LINE
- PROJECT BOUNDARY LINE
- CENTERLINE OF TRANSMISSION LINE R/W
- MONUMENT

ELEVATION OF POND IS BASED ON U.S.G.S. DATUM
BEARINGS REFER TO GRID NORTH
GRID LINES ARE REFERENCED TO TRANSVERSE MERCATOR GRID PROJECTION, EAST ZONE NEW YORK STATE

ERIE BOULEVARD HYDROPOWER, LP
LIVERPOOL, N.Y.

MIDDLE RAQUETTE RIVER PROJECT

HIGLEY DEVELOPMENT

PROJECT BOUNDARY AND LOCATION MAP

EXHIBIT G — SCALE: 1" = 400' — SHEET NO. 1

400 200 0 400 800 1200 1600 2000

NO.	DATE	DESCRIPTION OF ISSUE OR REVISION	DR.	CK.	APP.	NO.	DATE	DESCRIPTION OF ISSUE OR REVISION	DR.	CK.	APP.	NO.	DATE	DESCRIPTION OF ISSUE OR REVISION	DR.	CK.	APP.

NO.	DATE	DESCRIPTION OF ISSUE OR REVISION	DR.	CK.	APP.
5	2/13/02	ORDER ISSUING NEW LICENSE	PA	TMS	TMS
4	3/23/99	UPDATE MAP	MRB	JFK	SSH
3	2/8/93	LIC. APP. ACCEPTED FOR FILING	---	DWM	---
2	10/28/91	LICENSE APPLICATION	KW	TMS	SSH
1	12/10/90	DRAFT APPLICATION	JPC	TMS	J.S.

ORIGINAL ISSUE DATE

FILE NAME: 012320.DGN, 012320.CIT

FERC NUMBER: 2320-1001

NOTE: SEE REV. 8 IN DOCU-CADD FOR REVISIONS 1,2 & 3

FERC NO. 2320-1001

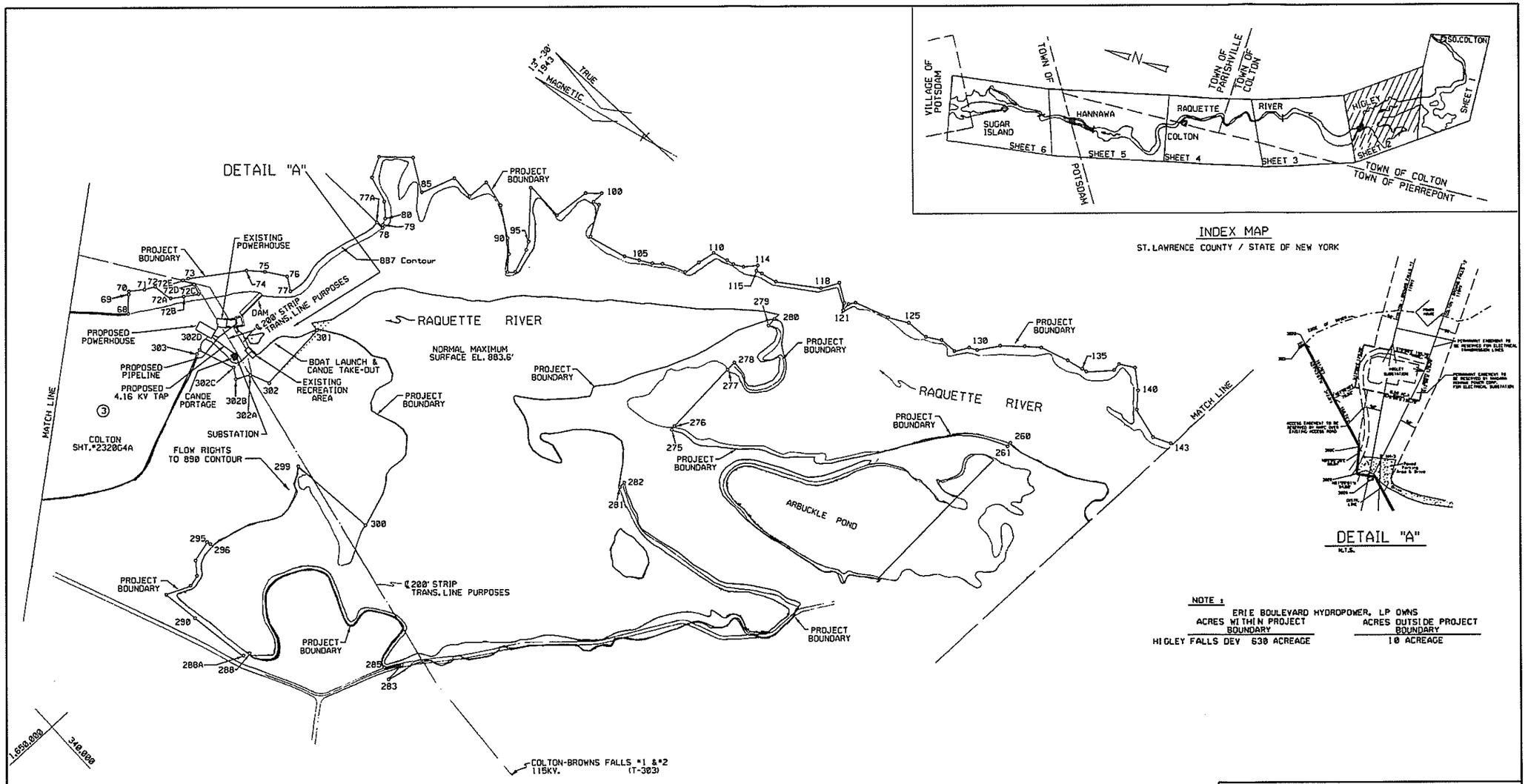

INDEX MAP

ST. LAWRENCE COUNTY / STATE OF NEW YORK

DETAIL "A"

N.T.S.

NOTE :

ERIE BOULEVARD HYDROPOWER, LP OWNS

ACRES WITHIN PROJECT BOUNDARY	ACRES OUTSIDE PROJECT BOUNDARY
HIGLEY FALLS DEV 638 ACREAGE	10 ACREAGE

LEGEND

- ANGLE POINT IN PROJECT BOUNDARY
- TOWN LINE
- PROJECT BOUNDARY LINE
- CENTERLINE OF TRANSMISSION LINE R/W
- MONUMENT

ELEVATION OF POND IS BASED ON U.S.G.S. DATUM
BEARINGS REFER TO GRID NORTH
GRID LINES ARE REFERENCED TO TRANSVERSE MERCATOR GRID PROJECTION, EAST ZONE NEW YORK STATE

ERIE BOULEVARD HYDROPOWER, LP
LIVERPOOL, N.Y.

MIDDLE RAQUETTE RIVER PROJECT

HIGLEY DEVELOPMENT

PROJECT BOUNDARY AND LOCATION MAP

EXHIBIT G SCALE: 1"=400' SHEET NO. 2

400 200 0 400 800 1200 1600 2000

NO.	DATE	DESCRIPTION OF ISSUE OR REVISION	DR.	CK.	APP.
102	2/13/02	ORDER ISSUING NEW LICENSE	PA	TMS	TMS
101	4/11/00	REVISED PER FERC ORDER AMENDING LICENSE ISSUED 3/1/2000	SM	JFK	TMS
100	1/11/00	CHANGED OWNERSHIP TO ERIE BOULEVARD HYDROPOWER, LP AND ADDED PROPERTY LINE	SM	JFK	TMS

ORIGINAL ISSUE DATE

FILE NAME G22320.DGN G22320.CIT

FERC NO. 2320-1002

FERC NO.2320-1002

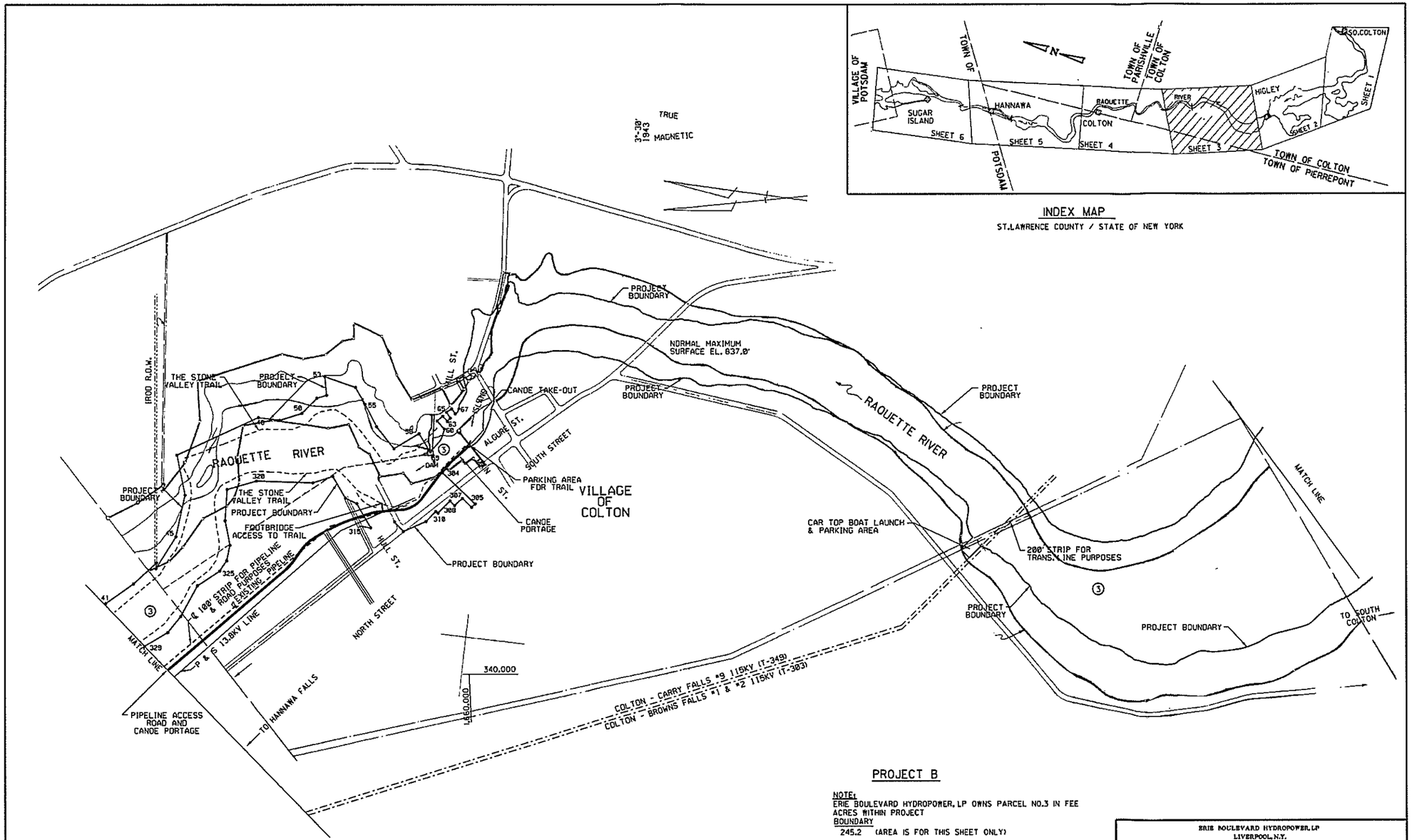

PROJECT B

NOTE:
ERIE BOULEVARD HYDROPOWER, LP OWNS PARCEL NO.3 IN FEE
ACRES WITHIN PROJECT
BOUNDARY
245.2 (AREA IS FOR THIS SHEET ONLY)

LEGEND

- ANGLE POINT IN PROJECT BOUNDARY
- TOWN LINE
- PROJECT BOUNDARY LINE
- CENTERLINE OF TRANSMISSION LINE R/W
- MONUMENT
- PROPOSED TRAIL SYSTEM

ELEVATION OF POND IS BASED ON U.S.G.S. DATUM
BEARINGS REFER TO GRID NORTH
GRID LINES ARE REFERENCED TO TRANSVERSE MERCATOR GRID PROJECTION, EAST ZONE NEW YORK STATE

ERIE BOULEVARD HYDROPOWER, LP
LIVERPOOL, N.Y.

MIDDLE RAQUETTE RIVER PROJECT

COLTON DEVELOPMENT

PROJECT BOUNDARY AND LOCATION MAP

EXHIBIT G — SCALE: 1" = 400' — SHEET NO.3

400 200 0 400 800 1200 1600 2000

NO.	DATE	DESCRIPTION OF ISSUE OR REVISION	DR.	CK.	APP.
5	2/11/02	ORDER ISSUING NEW LICENSE	PA	TMS	TMS
4	3/25/99	UPDATED MAP	MRB	JFK	SSH
3	2/11/93	LIC. APP. ACCEPTED FOR FILING	—	DMM	—
2	10/28/91	LICENSE APPLICATION	KMW	TMS	SSH
1	12/10/90	DRAFT APPLICATION	JPC	TMS	JLS

ORIGINAL ISSUE DATE
FILE NAME: G32320.DGN G32320.CIT
FERC NUMBER: 2320-1003

FERC NO. 2320-1003

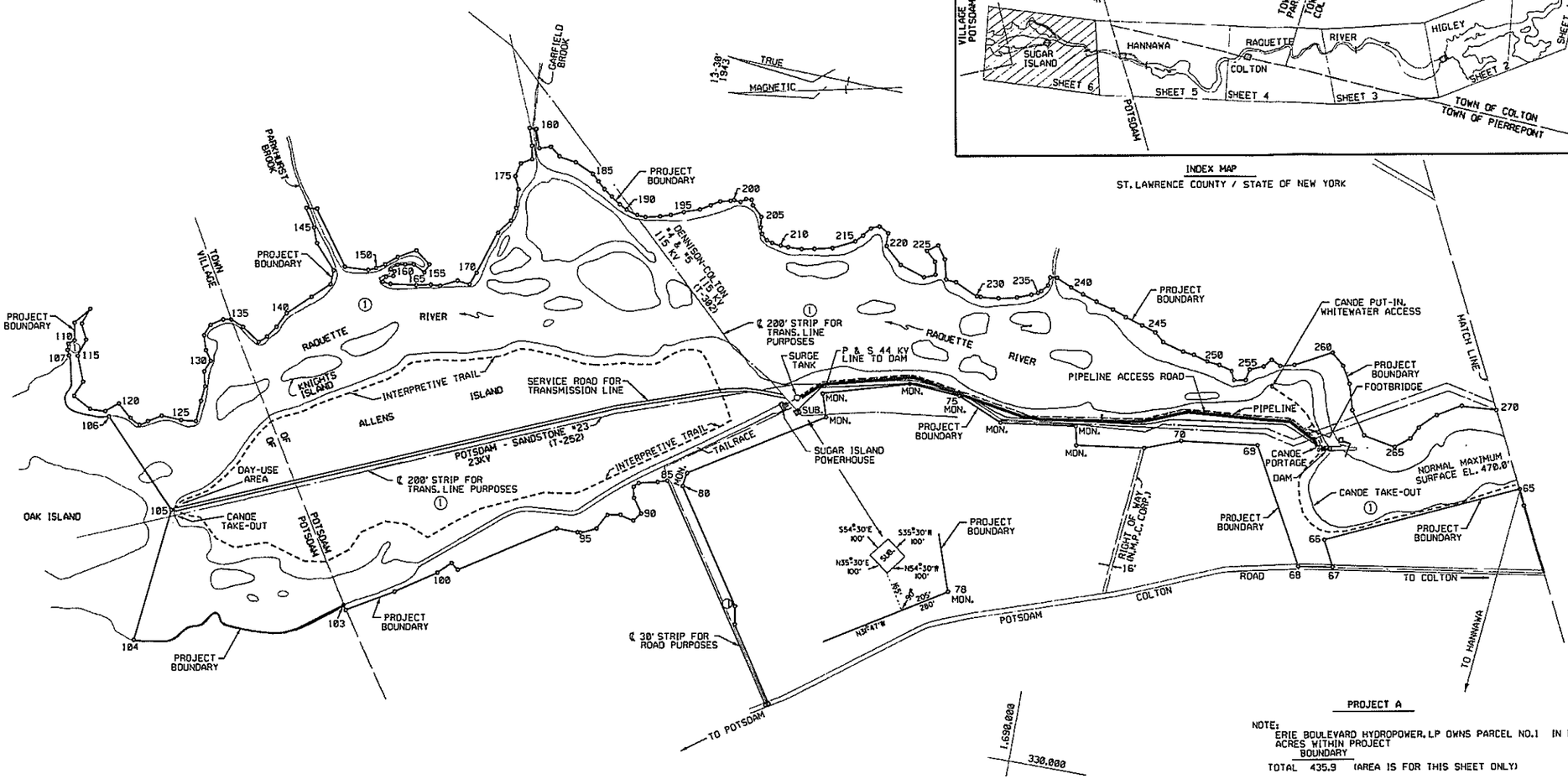

PROJECT A

NOTE:
ERIE BOULEVARD HYDROPOWER, LP OWNS PARCEL NO.1 IN FEE
ACRES WITHIN PROJECT BOUNDARY

TOTAL 435.9 (AREA IS FOR THIS SHEET ONLY)

LEGEND

- ANGLE POINT IN PROJECT BOUNDARY
- TOWN LINE
- PROJECT BOUNDARY LINE
- CENTERLINE OF TRANSMISSION LINE R/W
- MONUMENT

ELEVATION OF POND IS BASED ON U.S.G.S. DATUM
BEARINGS REFER TO GRID NORTH
GRID LINES ARE REFERENCED TO TRANSVERSE MERCATOR GRID PROJECTION, EAST ZONE NEW YORK STATE

ERIE BOULEVARD HYDROPOWER, LP
LIVERPOOL, N.Y.

MIDDLE RAQUETTE RIVER PROJECT

SUGAR ISLAND DEVELOPMENT

PROJECT BOUNDARY AND LOCATION MAP

EXHIBIT G — SCALE: 1" = 400' — SHEET NO. 6

400 200 0 400 800 1200 1600 2000

NO.	DATE	DESCRIPTION OF ISSUE OR REVISION	DR.	CK.	APP.
5	2/13/02	ORDER ISSUING NEW LICENSE	PA	TMS	TMS
4	3/23/99	UPDATED MAP	MRB	JFK	SSH
3	2/12/93	LIC. APP. ACCEPTED FOR FILING	—	DRM	—
2	10/28/91	LICENSE APPLICATION	PRW	TMS	SSH
1	12/10/90	DRAFT APPLICATION	JPC	TMS	JLS

ORIGINAL ISSUE DATE

FILE NAME: G62320.DGN, G62320.CIT

FERC NUMBER: 2320-1006

FERC NO. 2320-1006