CARVER FALLS HYDROELECTRIC PROJECT
FERC Project No. 11475

RECREATION PLAN

Carver Falls

Central Vermont Public Service Corp.
77 Grove St.
Rutland, VT 05701

February 2010

Table of Contents

1.0 Introduction 1
1.1 License Requirements 1
1.2 Initial Assessment and Proposed Improvements 2
2.0 Proposed Recreation Enhancements 4
2.1 Public Access 4
2.2 Canoe Portage 4
2.3 Falls Viewing 5
2.4 Signage 6
2.5 Consideration of Disabled Needs 6
2.6 Soil Erosion and Sediment Control Plan 7
3.0 Implementation Schedule 8
4.0 Agency Consultation 9
5.0 References 9

Appendix A: Photographs
Appendix B: Site Plan Drawings
Appendix C: Interpretive Signage
Appendix D: Correspondence

1.0 Introduction

The Carver Falls Hydroelectric Project was issued an original FERC license on February 25, 2009. The Project (FERC No. 11475) is located on the Poultney River in Washington County, New York, and Rutland County, Vermont and is owned and operated by Central Vermont Public Service Corporation (CVPS). The FERC license incorporates and is subject to the conditions in the corresponding Water Quality Certifications (WQC) issued by the Vermont Agency of Natural Resources (VANR) and the New York State Department of Environmental Conservation (NYSDEC). The new license and associated WQCs require CVPS to develop a Recreation Plan.

The 1.9-megawatt Project, shown in Figure 1, is located on the New York/Vermont border at river mile 3.8 on the Poultney River before it empties into Lake Champlain and consists of the Carver Falls dam, a 10-acre reservoir, a bypass reach, powerhouse, and existing recreational facilities. The Project dam is located at the top of the 80-foot-drop Carver Falls. The powerhouse, several hundred feet downstream of the falls, is on the New York side of the river.

Existing recreation facilities at the Project include a parking area located near the southern end of the dam. On the upstream side of the current parking area, an approximately 600-foot-long trail runs east through a meadow to an informal canoe launch on the impoundment. On the downstream side of the parking area is a fence and gate leading to the powerhouse service road and a trail that runs north to two overlooks to the dam and falls. One is a small viewing platform (overlook) located on top of the penstock, and the second viewpoint is located nearby on a steep promontory. A half-mile-long trail runs southwest from the powerhouse access road to the river approximately 1,000 feet downstream from the dam; this is used as an informal downstream portage trail. Vehicular access beyond the parking area is currently restricted to CVPS service vehicles.

1.1 License Requirements

The FERC license requires that CVPS provide public access to the project resources and to implement the recreation enhancements proposed by CVPS in their license application. Under license Article 401 of the FERC license, condition L of the Vermont Water Quality Certification, and condition 12 of the NYSDEC Water Quality Certification, CVPS is required to develop a Recreation Plan for the Project.

Although license Article 401(A) requires CVPS to file a recreation plan within 6 months of license issuance (by August 25, 2009), the Vermont Water Quality Certification (condition L) directs CVPS to submit a recreation plan and implementation schedule to the VANR within one year of license issuance. Therefore, on May 18, 2009, CVPS submitted to FERC a request for a six month extension (until February 25, 2010) to file the final recreation plan. FERC granted the extension request by order dated January 26, 2010.

This plan has been developed to comply with Article 401 (A) of the license and the associated WQCs from Vermont and New York. Condition 12 of NYSDEC's certification (Appendix A of the license) requires CVPS to provide cartop boat access to the impoundment, parking near the southern end of the dam to accommodate boater's parked cars, and a canoe portage route to a point downstream of the powerhouse, as proposed in CVPS's license application. NYSDEC's certification condition 15 requires that CVPS provide improved parking and viewing access opportunities for the general public.

VANR's certification condition L (Appendix B of the license) requires CVPS to develop and implement a final recreation plan, approved by the VANR and updated at up to ten-year intervals, that includes a

provision to allow, but not encourage through additional improvements or signage, access to the promontory viewpoint and measures for erosion control. Condition J of the Vermont certification specifies that CVPS shall allow public access to the project lands.

The New York State Water Quality Certification condition 12 states:

> *Recreational Access: The certificate holder will provide cartop boat access to the impoundment as proposed in the Application, with parking as shown in Figure 15 of the Application, for no less than 5 cars. The certificate holder shall also provide a canoe portage route to a point downstream of the Powerhouse as shown on figure 15 and described in section E 2.6.3 of the application. These construction activities are subject to all the pertinent conditions listed under part C of this certification.*

Condition L of the Vermont Water Quality Certification states:

> *Recreational Facilities. Recreational facilities shall be constructed and maintained consistent with a recreation plan approved by the Department. The plan shall include a provision to allow but not encourage access to the promontory. The plan shall be filed with the Department within one year of license issuance and shall include an implementation schedule. Where appropriate, the recreation plan shall include details on erosion control. The plan shall be updated at intervals not exceeding ten years or a written statement provided that indicates the basis for there being no need to upgrade the facilities or otherwise modify the plan. Modifications to the recreation plan shall also be subject to Department approval over the term of the license.*

1.2 Initial Assessment and Proposed Improvements

The recreation enhancements required by the license were initially proposed by CVPS in their license application (CVPS, 1994), and in a subsequent additional information filing (CVPS, 1996). The proposed improvements included provisions for providing car top boat access to the impoundment, parking to accommodate boater's parked cars, a canoe portage route to a point downstream of the powerhouse, viewing access opportunities for the general public, and signage. Since license issuance, CVPS has revisited some of the elements and offered alternatives to the original enhancements to the VANR and NYSDEC. The proposed changes were presented in a memo dated May 18, 2009 to the VANR and NYSDEC for consideration.

A site visit with VANR and NYSDEC was then conducted on June 2, 2009 at the Project to view and discuss the proposed recreation enhancements. The recreation improvements presented within have been developed based on CVPS's original proposals during the license application phase, and refined in consultation with the VANR and NYSDEC.

In summary, the major changes to the initial proposal include:

1. Limit access to the upper and lower portage trails to foot travel only, due to project security and public safety concerns, and
2. Construct a new path and viewing platform closer to the dam in compliance of the Americans with Disabilities Act of 1990 (ADA), in lieu of improving the existing penstock overlook platform.

Figure 1: Carver Falls Hydroelectric Project.

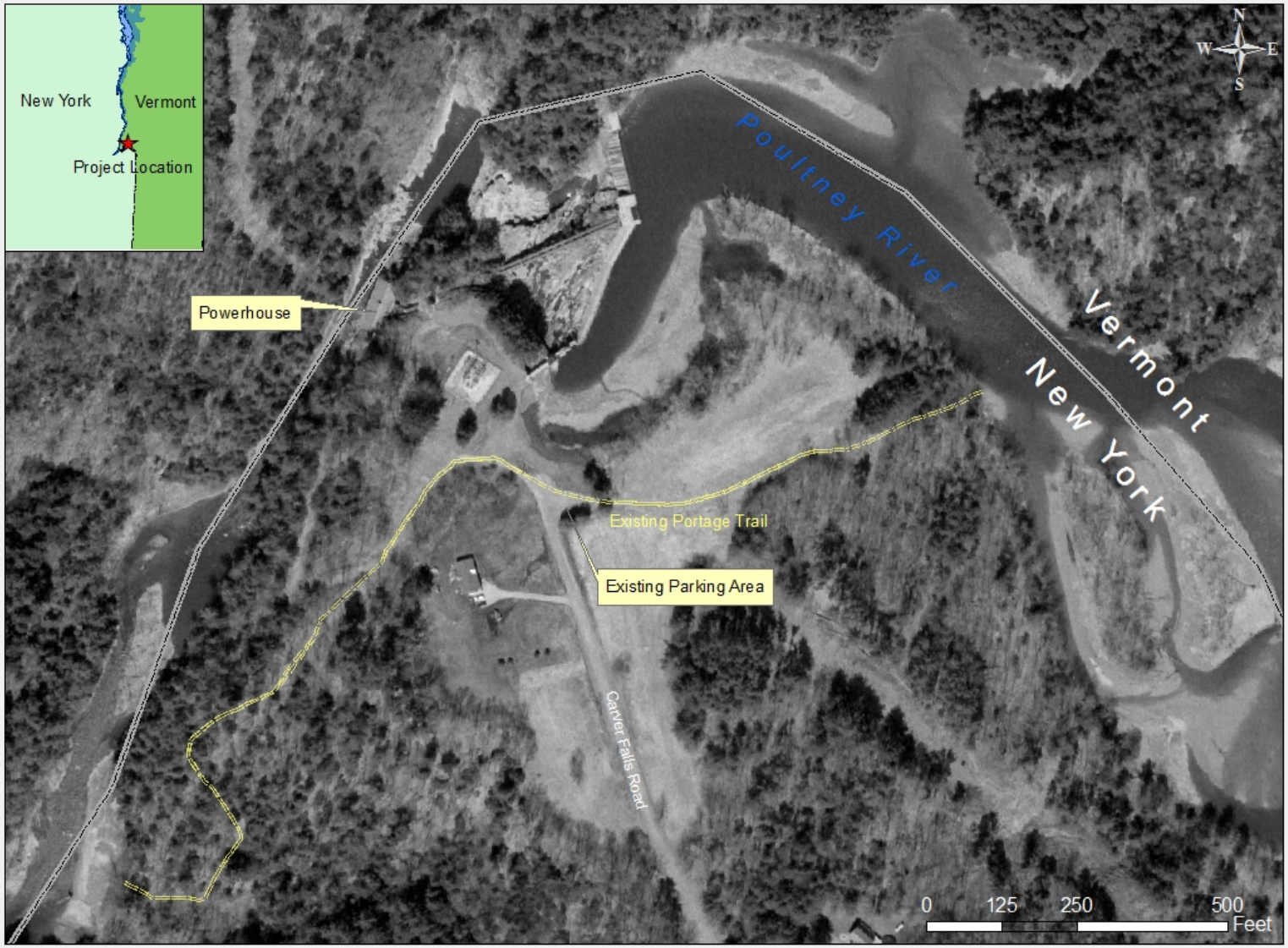

Black and white digital orthophotography obtained from Vermont Mapping Program.

2.0 Proposed Recreation Enhancements

The recreational enhancements proposed for each site are detailed in this section. Photographs of the current conditions are shown in Appendix A and the associated drawings detailing the proposed improvements are located in Appendix B. Note that the revised Exhibit G drawings which show the project boundary for this Project were submitted to FERC on November 3, 2009. The project boundary was revised to include the portage trail and recreational areas at the Project. The drawings in Appendix B also contain a reference to the project boundary location, as appropriate.

Note that any tree removal proposed or required during construction of the recreation enhancements will be done so in compliance with Article 405 of the license relative to protection of the endangered Indiana bat. Article 405 requires that CVPS shall avoid removing trees (of 10-inch-diameter-breast-height or larger) during April 1 through October 31 of each year. If tree removal must occur between April 1 and October 31, for the purpose of access to project recreation sites, for example, CVPS must prepare and file an Indiana bat protection plan.

2.1 Public Access

Recreational use of the Poultney River at the Carver Falls Project is comprised of fishing, canoeing, scenic viewing, and wildlife observation. Road access is available only from the New York side of the river. The rugged topography, extreme slopes, and private property on the Vermont side make access difficult (FERC, 1997). CVPS is proposing to provide continued public access to the project area and has planned several recreational improvements. Public access to the Project will be allowed during daylight hours only, and the use restrictions will be displayed on a new sign (Sign B in Appendix C) posted at the parking area. The existing signs displaying the use restrictions are shown in Plate 1 (Appendix A).

CVPS is proposing to improve the existing parking area. Given security concerns it was agreed with the agencies that the parking area would remain in the existing location and vehicle access would not be allowed beyond the existing gates. The gates will be improved to allow easier access for persons carrying boats, as well as wheelchair access to the new viewpoint location. The stone powerhouse (c. 1894) can be reached by walking down the service road approximately ¼ mile from the parking area (Plate 2).

CVPS has agreed to allow, but not encourage use of the promontory overlook. The promontory is a ledge outcrop which provides a viewing location of the upper and lower falls. As described in the response to Additional Information Request No. 5 (CVPS, 1996), the intent of CVPS is to discourage the use of the existing promontory overlook, but not to prohibit use. This will be accomplished by accentuating the new ADA compliant viewing platform through interpretive and directional signage, and removing the planks across the small ditch along the informal trail to the promontory overlook. The trail would still be passable but its appearance will be less formal and attractive. A warning sign will be placed near the path leading to the overlook informing users of the associated hazards (Sign 7 shown on SP9 in Appendix B).

2.2 Canoe Portage

<u>Upper Portage Trail</u>

On the upstream side of the parking area, an approximately 600-foot-long foot trail, which is currently gated to prevent vehicular access (Plate 3), runs east through a meadow to a signed canoe launch/take-out on the impoundment (Plate 4). This trail is used for river access and as a portage.

CVPS initially proposed enhancements to the upstream portage trail including providing driving access to the upstream portage site. CVPS will still maintain the upper portage through the meadow and replace the existing gate to allow car top boat access (SP2). The upper portage is relatively flat and free of obstructions which facilitates portaging to the parking area from the river. CVPS anticipates increased opportunity for public misuse of the site during night time hours if vehicular access is allowed to the wooded canoe take-out location. The project is located at a dead-end road and currently experiences problems with the public using the parking area at night contrary to its intended purpose of parking for river access. The VANR and NYSDEC were in agreement with this alternate proposal during a site visit conducted in June 2009.

Lower Portage Trail and Access Stairs

On the downstream side of the parking area is a fence and gate leading to the powerhouse service road (Plate 1) and a half-mile-long trail that runs from the powerhouse access road to the river approximately 1,000 feet downstream from the dam which is currently used as an informal downstream portage trail. Vehicular access beyond the parking area is currently restricted to CVPS service vehicles.

CVPS is proposing to improve the wooded trail section of the lower portage and provide a terraced stairway access to the river at the trail terminus. Improvements to the wooded portage trail will include erosion repair and improvements to trail drainage by constructing water bars for cross drainage at regular intervals (SP4). To provide access to the river at the end of the portage trail, CVPS is proposing to construct stone-filled steps down the steep bank to the river at the canoe put-in area (SP5). These steps will prevent erosion from recreationalists accessing the river in this location. Additional erosion control measures are described in Section 2.6 of this plan.

CVPS is not proposing to construct a new cul-de-sac and canoe drop-off road as was initially proposed in their Response to Additional Information Request (CVPS, 1996). Similar to the upper portage area, CVPS anticipates increased opportunity for public misuse of the site in this area during night time hours if vehicular access is allowed. In addition, CVPS has project security and public safety concerns if vehicular access is allowed past the existing gate. The existing portion of the lower portage trail where the improved access and cul-de-sac were initially proposed is relatively flat which facilitates portaging from the parking area.

The construction and use of the downstream portage trail and river access could adversely affect cultural resources. An initial site walk over with archaeologists was conducted in the spring of 2009. CVPS proposes to finalize the specific location of the canoe put-in area and steps following completion of archeological studies to ensure the protection of the potentially significant cultural resources in this area.

2.3 Falls Viewing

On the downstream side of the parking area, there is an existing informal trail that runs through the mowed grounds of the project to two overlooks at the dam and falls. One is a small viewing platform (overlook) located on top of the penstock (Plate 5), and the second viewpoint is located nearby on a steep promontory. Public access to the promontory was discussed in Section 2.1 of this plan.

CVPS initially proposed enhancements to the existing overlook on top of the active penstock to include: (1) a new 4-foot-wide, pressure treated, pine deck; (2) a 42-inch-high safety railing; (3) replacement of the steel carrier beams anchoring the deck; (4) placement of gravel on the penstock trail; (5) improvements to interpretive signage and (6) removal of vegetation obstructing views. VANR (by letter dated February 14, 1996) stated that the trail to the penstock lookout should be packed limestone so that it

is accessible to persons in wheelchairs. CVPS, in their Response to Additional Information Request (1996), provided a conceptual design drawing of the proposed penstock overlook.

CVPS and its landscape architect visited the site in April 2009 to begin developing designs for the recreation improvements. During that site visit, the grade was measured along the proposed access trail from the parking area down to the existing penstock overlook location and it was determined that the grade was too steep to allow for safe wheelchair access in accordance with ADA guidelines. The fill and switchbacks needed to meet ADA standards would block the roadway to the surge tanks and sections of the penstock (the road provides access for maintenance vehicles). Therefore, CVPS proposed an alternative viewing location closer to the dam (Plate 6), referred to as the Scenic Overlook Deck. The alternate design will include an improved path leading to a viewing area closer to the dam, interpretive signage and removal of vegetation obstructing views (SP3 and SP6). The viewing platform and trail will be designed to be ADA accessible. Limited and selective pruning will be done to the white pine trees on the slope between the overlook deck and the river to improve the view at that location.

During the June 2009 site visit the NYSDEC and VANR requested that the existing penstock overlook be retained and improved. Following consultation with CVPS's Risk Manager, CVPS does not want to allow access to the penstock due to both public safety and project security reasons. CVPS has developed an alternative viewing location which is ADA compliant and is also allowing continued access to the promontory for scenic viewing of Carver Falls. For these reasons, CVPS is not proposing to improve the existing penstock overlook. It is CVPS's intention to remove this platform, which was originally installed for maintenance purposes.

2.4 Signage

The recreational experience at the Carver Falls Project will be enhanced through interpretive signage at the powerhouse, falls viewing location, and parking area. The proposed signs will identify CVPS as the owner of the site, inform the visitor of the significance and history of the project, and also direct visitors to project recreational areas. The signs proposed by CVPS include:

1. Directional signage for the parking area, trails, powerhouse, and overlook
2. Interpretive sign at parking area informing of significance and history of the site
3. Interpretive sign on the powerhouse indicating age and function
4. Interpretive sign at the overlook describing natural features and history of the hydro
5. Warning sign near the path leading to the promontory overlook

Details of the draft interpretive sign content are included in Appendix C. SP1 shows the proposed location of the signage.

2.5 Consideration of Disabled Needs

This section describes how CVPS developed the recreation enhancements presented in this plan in consideration of the needs of the disabled with respect to the Americans with Disabilities Act of 1990.

The parking area, walkway, and Scenic Overlook Deck comply with current ADA guidelines for accessibility. The parking area surface is ¾" Sure-Pack and it is graded at ¼" per foot. The parking space closest to the walkway is reserved with an ADA sign.

The boulder bollards and a steel gate are designed to limit access to the site by ATVs, snowmobiles, and unauthorized vehicles. The boulders are spaced with 36" of clear space between them so pedestrians, wheelchairs, and those carrying a canoe can pass unimpeded (ADA Guidelines, Section 403.5.1).

The walkway to the Scenic Overlook Deck is five feet wide, surfaced with Sure-Pack, and graded to less than 1 in 20 (ADA Guidelines Chapter 4, Sections 402.2 and 403.3). The walkway leads to an L shaped observation deck that provides a view of the dam and penstock. The deck is surfaced with slip resistant expanded steel grating. The deck is protected with a 42" high gridded fence. There is one bench on the deck with adjacent space for a wheelchair.

2.6 Soil Erosion and Sediment Control Plan

As required by the license, this section of the recreation plan includes a soil erosion and sediment control plan for the construction of the portage trail to the downstream canoe put-in area, as well as other additional erosion control measures proposed to minimize erosion during and after construction.

The erosion control plan combines two strategies (temporary and permanent) to minimize erosion during and after construction. Temporary erosion controls include silt fences, mulch, and erosion control blankets. Permanent erosion controls include grade dips on the trails, rip-rap, and seeding.

<u>SP2 – Entry Site Plan</u>
The limits of construction are relatively small and the topography is flat so there is low risk of erosion. A temporary silt fence (SP8) will be installed downslope of the proposed parking improvements to prevent potential erosion related to the construction from washing into the impoundment. The silt fence will be removed after any disturbed areas inside the limits of construction are seeded and stabilized.

<u>SP3 – Scenic Overlook Site Plan</u>
Temporary silt fences will be installed downslope of the limits of construction for the ADA accessible Scenic Overlook. The silt fences will be removed after any disturbed areas inside the limits of construction are seeded and stabilized.

<u>SP4 & SP5 - Fishing Access & Portage Trail</u>
The scope of work shown on SP4 is intended to control erosion on this existing foot trail. Two existing water bars at Stations 4+10 and 4+60 will be enhanced using U.S. Forest Service guidelines for grade dips. Three additional grade dips will be installed to minimize future erosion of this trail. Rip-rap will be installed at the outflows from each grade dip to dissipate the energy from the runoff and armor the slopes. A timber stairway will be installed at the end of the trail at the embankment to provide access to the river and avoid erosion of this bank. A temporary silt fence will be installed between the stairway construction and the river. Two small side slopes abutting the stairway will be stabilized with ferns and forest duff. Biodegradable jute netting will then be placed over the disturbed areas.

<u>Seed Disturbed Areas</u>
Surfaces that became disturbed due to construction will be limed, fertilized, seeded, mulched, and covered with an erosion control blanket. Lime will be applied at the rate of 90 pounds per 1000 square feet. Fertilizer will be applied at the rate of 20 pounds per 1000 square feet. Spring application of fertilizer is 12-6-6. Fall application of fertilizer is 10-10-10. Seed will be applied at the rate of 5 pounds per 1000 square feet. Table 1 shows the composition of the proposed seed mix. An erosion control blanket consisting of straw and 100% biodegradable natural organic fiber netting will be applied over the seeded areas as per manufacturer's recommendations.

Table 1: New England Premier Shade Mix from Catamount Seed Company

Seed Name	% of Mixture	Minimum Germination
Navigator Red Fescue	25%	85%
Longfellow II Chewing Fescue	25%	85%
Applaud Perennial Ryegrass	25%	90%
Spartan II Hard Fescue	15%	85%
Annual Ryegrass	10%	90%
Inert Matter	Less than 3.0%	---
Weed Seeds	Less than 0.1%	---

3.0 Implementation Schedule

Per Vermont certification condition L, the plan shall include an implementation schedule. Table 2 shows the approximate schedule for implementing the recreation enhancements proposed in this plan.

Table 2: Implementation Schedule for Carver Falls Recreation Plan

Date	Task
February 25, 2010	Submit Recreation Plan to FERC
Spring 2010	FERC review and approval process
Spring 2010	CVPS to finalize plan according to FERC decision, as necessary
Spring 2010	Determine and address additional regulatory requirements
Before April 1, 2010	Determine if any tree removal is necessary in consideration of Indiana bats (per license Article 405)
April 2010	Solicit proposals from contractors to implement improvements
May 2010	Review contractor proposals and make selection
June 2010	Address potential impacts to cultural resources
Summer 2010	Begin construction
Fall 2010	Complete construction
Fall 2010 (or as specified)	Submit as-built drawings to FERC
Within 10 years	Determine need to update the Recreation Plan

4.0 Agency Consultation

On May 18, 2009, a memo was sent to the NYSDEC and VANR regarding the recreation enhancement measures proposed by CVPS at the Project and offering to host a site visit. The purpose of the memo was to present the proposed changes to the initial recreation enhancements for review and approval from VANR and NYSDEC before CVPS moved forward with developing the designs contained within this plan.

A site visit with VANR and NYSDEC was conducted on June 2, 2009 at the Project to view and discuss the proposed recreation enhancements. A summary of the topics discussed during the site visit was sent to the VANR and NYSDEC that same day. Comments were received back regarding the site visit summary by both agencies; copies of this correspondence are included in Appendix D.

The draft Recreation Plan was provided to the VANR and NYSDEC for review by letter dated January 15, 2010. Comments were received via email from VANR on February 12, 2010 (attached in Appendix D), and the final plan, designs, and signage were revised to address these comments. A telephone call was placed to NYSDEC on February 18, 2010 to determine the status of their review of the draft plan. NYSDEC stated that, due to staffing constraints, they were unable to review the plan and therefore were not submitting comments. A copy of the final plan was submittal to VANR for approval per condition L of the Vermont Water Quality Certification on February 24, 2010. VANR formally approved this Recreation Plan by letter dated February 25, 2010 (attached in Appendix D).

5.0 References

CVPS 1994. Application for Initial License. Carver Falls Hydroelectric Project. Exhibit E - Environmental Report. April 22, 1994.

CVPS 1996. Response to FERC Additional Information Request. Carver Falls Project No. 11475. March 4, 1996.

FERC. 1997. Environmental Assessment for Hydropower License. Carver Falls Hydroelectric Project. Issued March 13, 1997.

U.S. Access Board. 2004. Americans with Disabilities Act and Architectural Barriers Act Accessibility Guidelines. July 23, 2004

Appendix A: Photographs

Plate 1: Existing gate at the powerhouse access road and signs displaying site use restrictions.

Plate 2: Service road leading to the Carver Falls powerhouse.

Plate 3: Existing gate at parking area; upper portage trail through the meadow shown in the background.

Plate 4: Canoe take-out location, New York side of the Poultney River upstream from Carver Falls dam.

Plate 5: Existing penstock overlook platform.

Plate 6: View of Carver Falls dam from the proposed Scenic Overlook Deck.

Appendix B: Site Plan Drawings

SP1 Master Plan – Recreation Enhancements

SP2 Entry Site Plan

SP3 Scenic Overlook Site Plan

SP4 Fishing Access & Portage Trail

SP5 Fishing Access & Portage Stairs

SP6 Scenic Overlook Details

SP7 Gates and Boulder Bollards

SP8 Construction Details

SP9 Signage

Appendix C: Interpretive Signage

Sign B	Carver Falls Interpretive Sign at Entry
Sign D	Carver Falls Interpretive Sign at Scenic Overlook
Sign F	Carver Falls Interpretive Sign at Powerhouse

Appendix D: Correspondence

GOMEZ AND SULLIVAN
Engineers, P.C.

55 North Stark Highway
Weare, NH 03281
T - (603) 529-4400
F - (603) 529-4411

MEMO

Date: May 18, 2009

To: Jeff Cueto (VANR), Mark Woythal (NYSDEC), Bill Schoch (NYSDEC), and Michael McMurray (NYSDEC)

From: Jason George

Re: Carver Falls Hydro Project Recreation Enhancements

CC: Mike Scarzello (CVPS), Beth Eliason (CVPS), Terry Krinsky (TKLA), Heather Campbell (FERC)

Introduction

The Carver Falls Hydroelectric Project (FERC Project No. 11475) was issued an original FERC license on February 25, 2009. The Project is located on the Poultney River in Washington County, New York, and Rutland County, Vermont and is owned and operated by Central Vermont Public Service Corporation (CVPS). Article 401(A) of the license requires CVPS to file a Recreation Plan to FERC within 6 months of license issuance. The license incorporates and is subject to the conditions issued by the New York State Department of Environmental Conservation (NYSDEC) and the Vermont Agency of Natural Resources (VANR) under section 401(a)(1) of the Clean Water Act, set forth in Appendices A and B, respectively of the license. The recreation plan is required by VANR condition L and NYSDEC condition 12.

Existing recreation facilities at the project are located on the New York side of the river and radiate out from a parking area located near the southern end of the dam. The recreation enhancements required by the license were initially proposed by CVPS in their 1995 license application, and subsequent additional information filing (March 6, 1996). The proposed improvements include provisions for providing car top boat access to the impoundment, parking to accommodate boater's parked cars, a canoe portage route to a point downstream of the powerhouse, viewing access opportunities for the general public, and signage. The proposed recreation enhancements were developed 13-14 years ago during the license application process. Since license issuance, CVPS is reconsidering some of the elements and offers alternatives to the original enhancements. A summary of the proposed changes is presented below.

Upper Portage Meadow Access Road

On the upstream side of the parking area, an approximately 600-foot-long foot trail, which is currently gated to prevent vehicular access, runs east through a meadow to an informal canoe launch on the impoundment. This trail is used for river access and as a portage.

CVPS initially proposed enhancements to the upstream portage trail including providing driving access to the upstream portage site. CVPS will still maintain the upper portage through the meadow and reconfigure the existing gate to allow car top boat access. However, CVPS is proposing to revise the requirements so that the upper portage is accessible only by foot. The upper portage is relatively flat and free of obstructions which facilitates portaging to the parking

area from the river. CVPS anticipates increased opportunity for public misuse of the site during night time hours if vehicular access is allowed to the wooded canoe take-out location. The project is located at a dead end road and currently experiences problems with the public using the parking area at night contrary to its intended purpose of parking for river access.

Lower Portage Cul-De-Sac

On the downstream side of the parking area is a fence and gate leading to the powerhouse service road and a half-mile-long trail that runs from the powerhouse access road to the river approximately 1,000 feet downstream from the dam which is currently used as an informal downstream portage trail. Vehicular access beyond the parking area is currently restricted to CVPS service vehicles.

CVPS initially proposed enhancements to the downstream portage trail to improve drainage and install terraces at the trail terminus to facilitate access to the river. The 1996 response to the additional information request (AIR) provided a conceptual design drawing for a downstream portage canoe drop-off area. Similar to the upper portage area, CVPS anticipates increased opportunity for public misuse of the site during night time hours if vehicular access is allowed. In addition, CVPS has project security and public safety concerns if vehicular access is allowed past the existing gate. The existing portion of the lower portage trail where the improved access and cul-de-sac was proposed is relatively flat which facilitates portaging from the parking area. CVPS is still prosing to improve the wooded trail section of the lower portage and provide the terrace access to the river at the trail terminus.

Falls Viewing Platform

Also on the downstream side of the parking area is a trail that runs through the mowed grounds of the project to two overlooks at the dam and falls. One is a small viewing platform (overlook) located on top of the penstock, and the second viewpoint is located nearby on a steep promontory.

CVPS initially proposed enhancements to the existing overlook on top of the active penstock to include: (1) a new 4-foot-wide, pressure treated, pine deck; (2) a 42-inch-high safety railing; (3) replacement of the steel carrier beams anchoring the deck; (4) placement of gravel on the penstock trail; (5) improvements to interpretive signage and (6) removal of vegetation obstructing views. VANR (by letter dated February 14, 1996) stated that the trail to the penstock lookout should be packed limestone so that it is accessible to persons in wheelchairs. The 1996 AIR provided a conceptual design drawing of the proposed penstock overlook.

CVPS and its landscape architect visited the site in April 2009 to begin developing designs for the recreation improvements. During that site visit, the grade was measured along the proposed access trail from the parking area down to the existing penstock overlook location and it was determined that the grade was too steep to allow for safe wheelchair access in accordance with the Americans with Disabilities Act of 1990. Therefore, CVPS is proposing an alternative viewing location closer to the dam. The alternate design will include an improved path leading to a viewing area closer to the dam, interpretive signage and removal of vegetation obstructing views. The existing penstock overlook platform will be removed due to safety concerns.

Summary

CVPS is currently working on draft designs for the proposed improvements at the Project with a landscape architect. The proposed changes to the initial enhancements are presented here for review and approval from VANR and NYSDEC before CVPS moves forward with the final designs. CVPS believes the revised enhancements would allow for adequate access and use of

the project recreational opportunities, including meeting the needs of the disabled, while still ensuring the security of the project and avoiding public safety and nuisance concerns.

CVPS would like to schedule a time for consultation either by phone call or a site visit sometime within the next two weeks. Although License Article 401(A) requires CVPS to file a Recreation Plan within 6 months of license issuance, VANR Water Quality Certification condition L directs CVPS to submit a recreation plan and implementation schedule to the VANR within one year of license issuance. CVPS has requested to FERC a six month extension (until February 25, 2010) to file the final recreation plan.

Attachments:

Diagrammatic Site Plan from License Application
Conceptual Designs of Proposed Canoe Drop-off Road and Overlook (from 1996 AIR response)

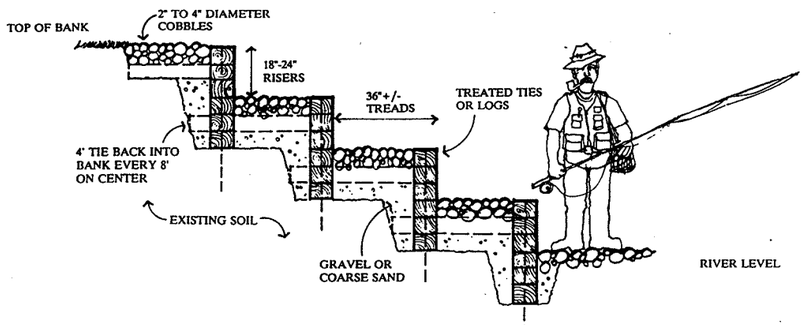

5 DOWNSTREAM RIVER ACCESS

NOT TO SCALE

RECOMMENDED SITE IMPROVEMENTS

1 ■ PARKING AREA
Since the parking area appears to provide sufficient parking to meet the recreational demand at this time there is no need to enlarge or formally surface the area beyond its existing size and condition. It is recommended that some of the existing vegetation that obscures views of the pond and dam be removed to open views of the pond and dam as seen from the road and parking area. Signage should be incorporated to inform the viewer of the significance and history of the site and direct the visitor and recreationist to points described below. A site register should be located at the parking area to gather information regarding the amount and types of use.

2 ■ MEADOW, UPPER PORTAGE AND POND ACCESS
A canoe portage trail should be established that begins on the upstream side at a point across the meadow and upstream of the wetland area. The beginning of the trail is located at grade with the pond's edge and in an area where disturbance can be kept to a minimum. Launching and removing canoes from the pond at this site is relatively easy and does not bring the canoeist within the warning buoys and potential hazard presented by the dam. Driving access should be provided to this upstream portage site. A narrow drive currently exists across the meadow and may have to be slightly improved to reach the portage site. Signage should be provided to direct the canoeist to the landing and portage.

3 ■ VIEWING AREAS OF THE FALLS
The current platform located on the active penstock should be improved to be more visible and accessible. This will require that directional signage be incorporated leading the viewer from the parking area to the viewing area and that the platform be widened and railings provided. Interpretive signage should be provided that describes the natural features and history of the hydroelectric use. The other viewing area located on the precipitous point should be discouraged from use. Utilization of this location and trails down to the falls will continue no matter how the site is signed, however, use of more hazardous areas should be discouraged for safety reasons and to prevent environmental degradation of the resource. No changes should be made that compromise the view of the falls, dam amd old penstock. All of these features contribute to the significance of the scene and should remain intact. By no means should the old penstock be removed.

4 ■ POWER HOUSE
Signage should be placed on the power house indicating its age and function. Driving access should not be provided to the general public. Walking access should be encouraged and signed along the access road and trail leading down from the substation.

5 ■ TRAIL TO LOWER PORTAGE AND RIVER ACCESS
The trail to the lower portage will be improved to accommodate vehicular traffic to a point just before the trail starts to descend. At this point an off-loading site and vehicle turn-around shall be constructed. Recreationists will be able to unload and return their vehicle to the parking lot. The trail to the lower portage and river access should be well signed from the upper portage site and from the parking area. Trail drainage should be improved by diverting storm water that currently funnels onto the trail and by constructing water bars for cross drainage at regular intervals. A series of wood crib terraces backfilled with gravel and cobbles should be constructed at the river bank to provide easier movement up and down to the water's edge. The terraces or steps can be approximately 24" in height with a tread width of 24-36". The overall width of the access should be determined by the configuration of the river bank. The terraces can be carved out of the existing embankment and recessed into the bank preventing them from being exposed during high water. Construction of the access steps/terraces will provide easier movement into the river for canoeists and fisherman, while preventing erosion of the river bank where the path currently leads to the river's edge.

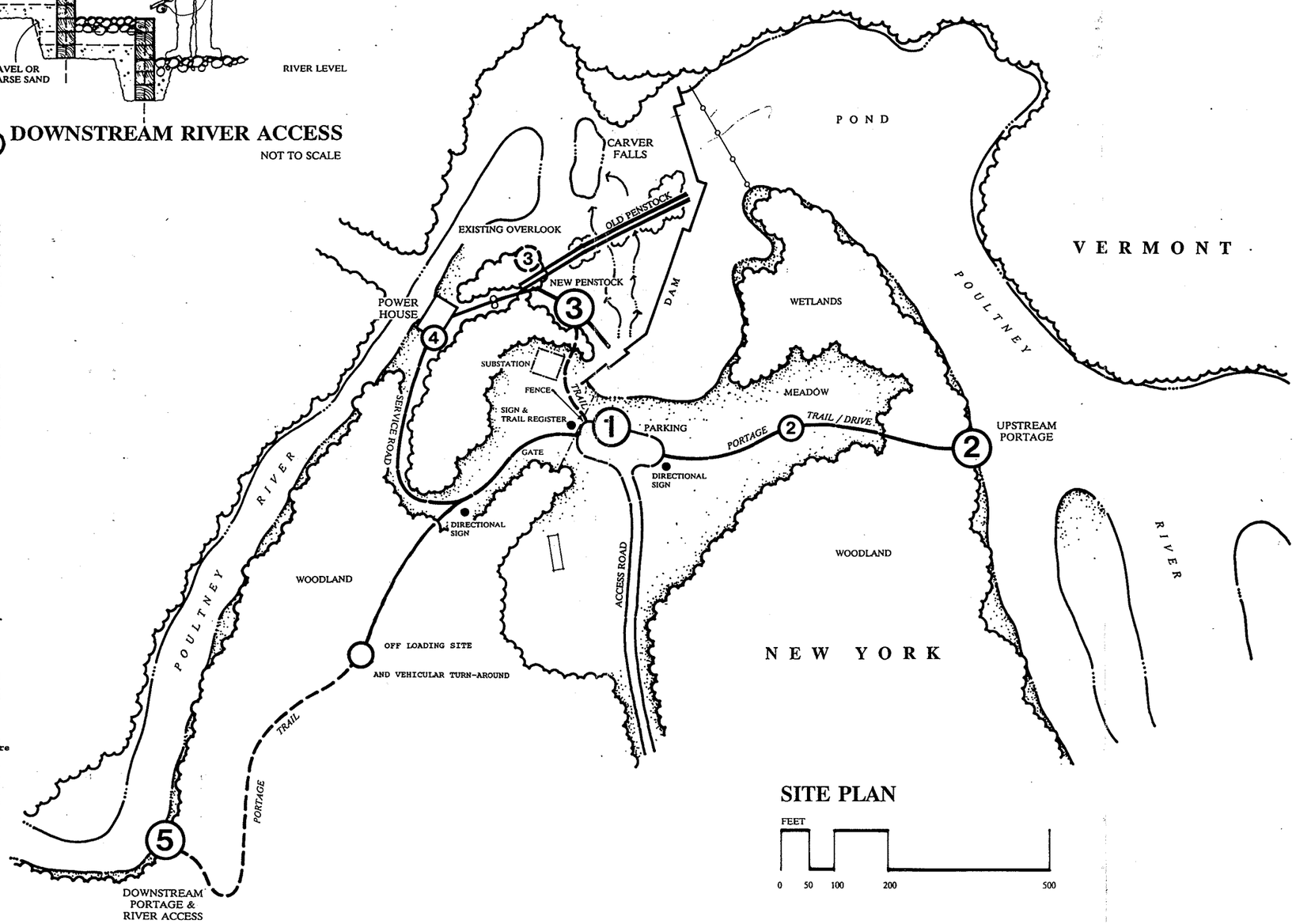

SITE PLAN

FEET

0 50 100 200 500

FIGURE 15

PROJECT TITLE:

Recreation and Visual Resource Evaluation
CARVER FALLS HYDROELECTRIC PROJECT
FERC Application #UL-88-12-002

Central Vermont Public Service Corporation
77 Grove Street,
Rutland, Vermont 05701

THE CAVENDISH PARTNERSHIP
PLANNING & LANDSCAPE ARCHITECTURE
The Academy Building
P.O. Box 466
Cavendish, Vermont 05142

Project#	Revisions
Design PDB	#1 4/14/94 BMP
Drawn PDB	
Checked	
Date NOVEMBER 10, 1993	
Scale 1"=100'	
Approved	

LEGEND:

SHEET TITLE:
DIAGRAMMATIC SITE PLAN

North | Sheet

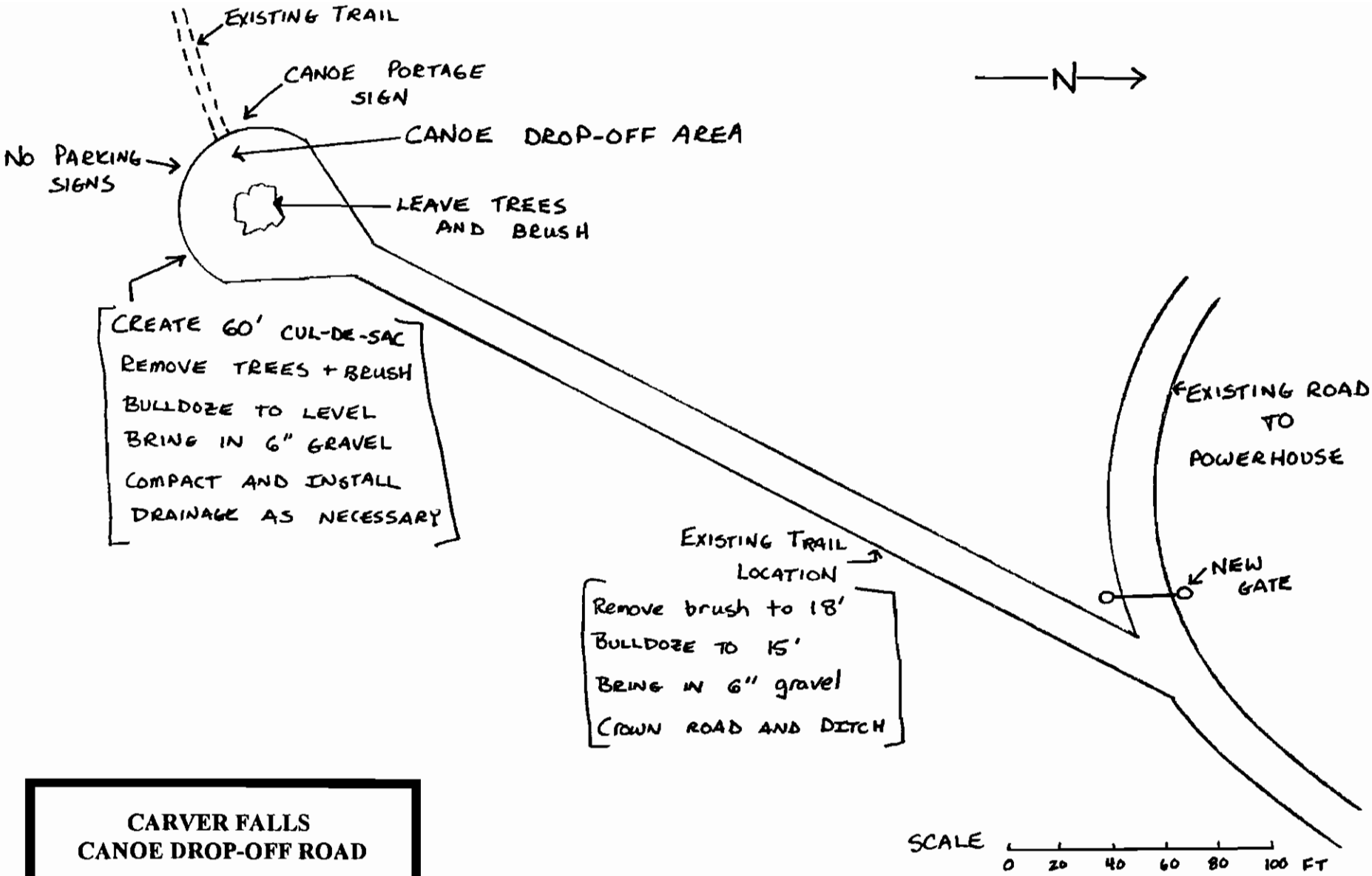

CARVER FALLS
CANOE DROP-OFF ROAD

CARVER FALLS
PROPOSED LOOKOUT

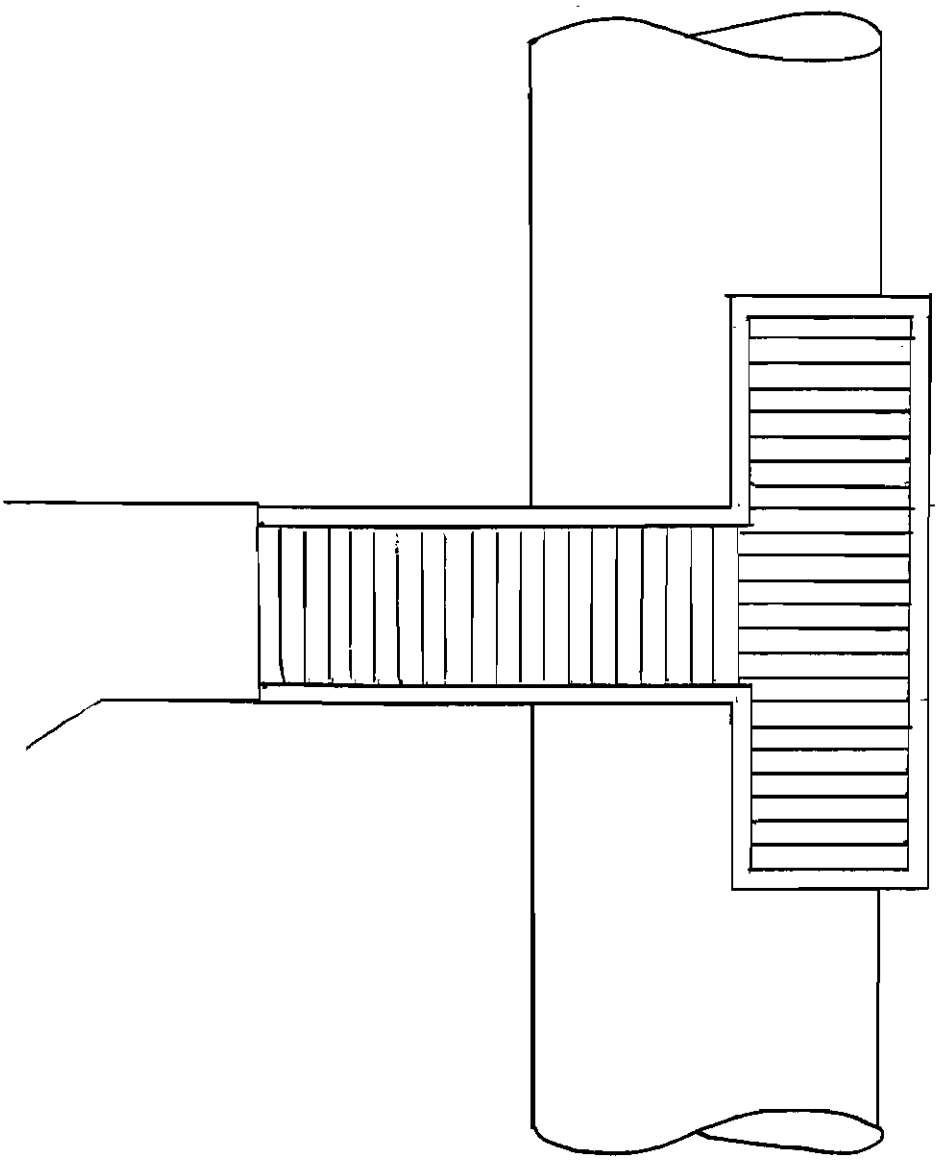

PRESSURE TREATED
S. YELLOW PINE
STANDARD DECK SIZES

PLAN VIEW

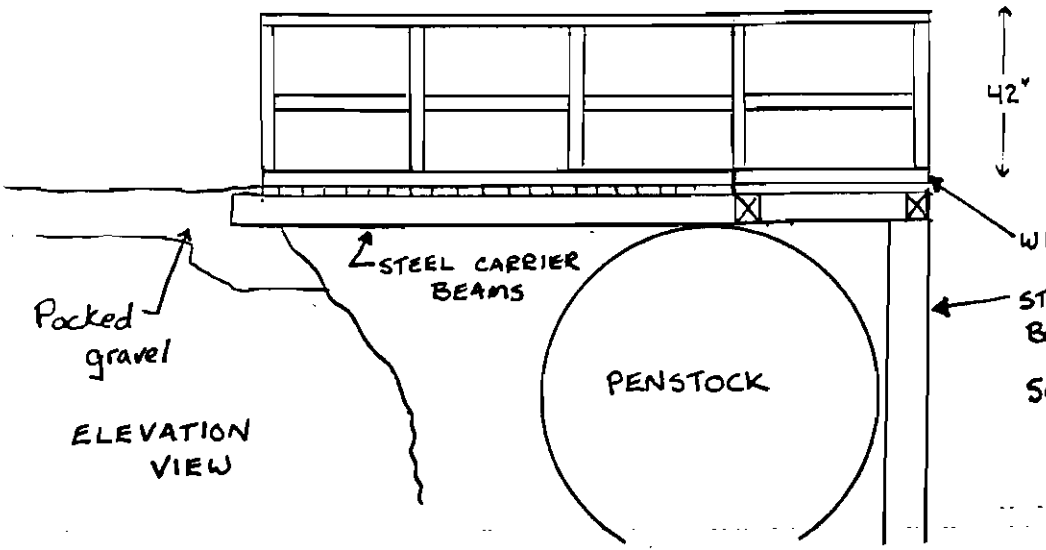

ELEVATION VIEW

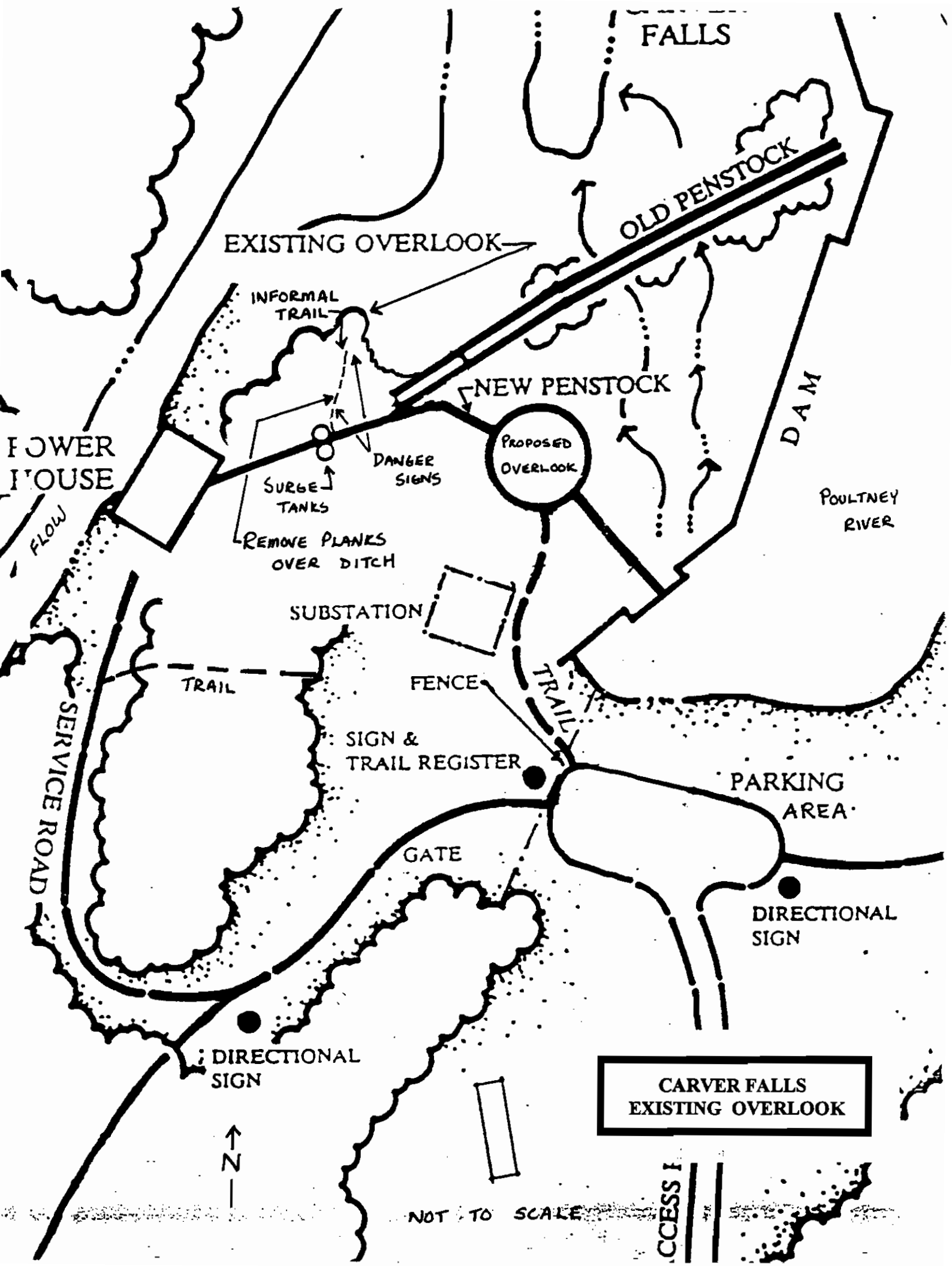

CARVER FALLS
EXISTING OVERLOOK

Jason George

From: Eliason, Beth [beliaso@cvps.com]
Sent: Tuesday, June 02, 2009 4:36 PM
To: Mark Woythal; Jeff Cueto; Zsido, David; terry@tkland.com
Cc: Jason George; Scarzello, Michael
Subject: RE: Carver Falls Hydro Project Recreation Enhancements

Thanks to all of you for making the trip to the Carver Falls hydro project this morning. I really appreciate your time, and your willingness to provide input on CV's planned recreation enhancements.

To briefly summarize the main items discussed:

- Given the steepness of the slope to that viewing area, ADA access will not be provided to the penstock viewing platform. The fill and switchbacks needed to meet ADA standards would block the roadway to the surge tanks and sections of the penstock (the road provides access for maintenance vehicles). Instead, a viewing platform near the upper section of the dam will be designed to be ADA accessible. Some pruning will be done to the white pines on the slope between the lawn and the river to improve the view at that location, but any pruning will be limited and selective.

- Mark Woythal (NYDEC) felt the value of the existing viewpoint from the penstock viewing platform was too important to remove access completely. A new platform will be designed at that location that will provide access to the view but not the penstock itself.

- Given security concerns it was agreed that the parking area would remain in the existing location and vehicle access would not be allowed beyond the existing gates. The gates will be improved to allow easier access for persons carrying boats, as well as wheelchair access to the new viewpoint.

- Jeff Cueto (VTDEC) and Mark both recommended contacting Kevin Mendik at the National Park Service for information on designing wheelchair accessible gates. Jeff will provide contact information.

- Mark Woythal recommended posting the property as day use only. If posted as such then after hours use could be enforced which may help abuse of the sight after hours.

I think I hit on the major points. Please let me know if I have left anything out.

Based on our discussions this morning, and agreement on the above items, Terry will begin design of the recreation enhancements and recreation plan. I believe Mark and Jeff agreed to work cooperatively on their review of the draft recreation plan, which will be a great help as we work on developing a final plan.

Thanks again ~

Beth

Beth Eliason, P.E.

Central Vermont Public Service Corporation

77 Grove Street

Rutland, VT 05701

Tel: 802.747.5594

Fax: 802.747.2195

Pager: 802.742.1827

-----Original Message-----
From: Jason George [mailto:jgeorge@gomezandsullivan.com]
Sent: Tuesday, May 19, 2009 3:45 PM
To: 'Mark Woythal'
Cc: Eliason, Beth; Scarzello, Michael; heather.campbell@ferc.gov; 'Bill Schoch'; 'Michael McMurray'; 'Jeff Cueto'; terry@tkland.com; Zsido, David
Subject: RE: Carver Falls Hydro Project Recreation Enhancements

A site visit has been scheduled for June 2, 2009 at 10:30am at the Carver

Falls Hydro Project to view the recreation enhancement measures proposed by

CVPS.

The agenda will be to walk the site and view the elements of the recreation

enhancements and recommended changes in accordance with the memo sent to you

all yesterday.

Please RSVP as well as direct any questions or concerns to me or Beth

Eliason (beliaso@cvps.com) at CVPS. Thanks.

Jason George

Gomez and Sullivan Engineers, P.C.

55 North Stark Highway

Weare, NH 03281

603.529.4400

From: Cueto, Jeff [Jeff.Cueto@state.vt.us]
Sent: Tuesday, June 02, 2009 5:11 PM
To: Eliason, Beth; Mark Woythal; Zsido, David; terry@tkland.com
Cc: Jason George; Scarzello, Michael
Subject: RE: Carver Falls Hydro Project Recreation Enhancements

Beth -- I'd note:

1. I suggested use of a timber platform and ramp in lieu of earth fill for the ADA facility. It would (my opinion) have the potential for being much more attractive than boulders and fill.
2. I agreed with Mark that the penstock viewing platform is a good feature to retain as it provides better visibility that the ADA site and places the viewer in a more dramatic position if you will. Just needs a few more railings for safety.
3. The promontory will remain "unadvertised" as planned with no upgrades but accessible in its present state.

Thanks for the outing. I'll forward Kevin's contact information.

Jeff

><{{{˜> ***Jeffrey R. Cueto, P.E., Chief Hydrologist***
><{{{˜> VT Department of Environmental Conservation
><{{{˜> Dam Safety and Hydrology Section
><{{{˜> Facilities Engineering Division, Laundry Bldg.
><{{{˜> 103 South Main Street, Waterbury, VT 05671-0511
><{{{˜> (802) 241-3758
><{{{˜> jeff.cueto@state.vt.us

From: Mark Woythal [mswoytha@gw.dec.state.ny.us]
Sent: Thursday, June 04, 2009 10:28 AM
To: Beth Eliason; David Zsido; Jeff Cueto; terry@tkland.com
Cc: Michael Scarzello; Jason George
Subject: RE: Carver Falls Hydro Project Recreation Enhancements

Beth,

Thank you for your review. It accurately reflects what was discussed at the meeting. I have nothing to add.

Sincerely,

Mark Woythal
Instream Flow & Wind Unit Leader

NYS Dept of Environmental Conservation
Div. of Fish Wildlife & Marine Resources Bureau of Habitat
625 Broadway, Albany, NY 12233-4756
mswoytha@gw.dec.state.ny.us
P (518) 402-8847
F (518) 402 9825

From: Eliason, Beth [beliaso@cvps.com]
Sent: Wednesday, June 03, 2009 11:01 AM
To: Cueto, Jeff; Mark Woythal; Zsido, David; terry@tkland.com
Cc: Jason George; Scarzello, Michael
Subject: RE: Carver Falls Hydro Project Recreation Enhancements

Thanks for your comments Jeff, consider them part of the record!

We would note, particularly with respect to #3 (and consistent with Article 18 of the FERC license), that for public safety, security and liability purposes, CV reserves the right to limit public access onto Company property.

Thank you as well for sending Kevin Mendik's contact information.

Beth

Jason George

From: Fitzgerald, Brian [Brian.Fitzgerald@state.vt.us]
Sent: Friday, February 12, 2010 3:52 PM
To: 'Jason George'
Subject: Carver Falls Project - Recreation Plan

Jason,

I have reviewed the draft Carver Falls recreation plan submitted by letter dated January 15, 2010. I offer the following comments on behalf of the Agency of Natural Resources.

Section 2.1: The final paragraph states a warning sign will be placed near the path to the promontory, but the design of the sign and its location are not included in Appendix B.

Section 2.6: The use of erosion control "netting" is mentioned in at least a couple of places. If erosion control matting is used, it should be the type that is made of woven plant material. Erosion control mats that use a woven synthetic netting for strength are to be avoided. The material does not biodegrade well and can trap or injure herptiles and other small animals. The specification for the erosion control material should be included on the appropriate site plan sheets.

Sheet SP7: I think it's fair to say that Carvers Falls has a rural character. It seems that the design of the gates and the specifications for the bollards are what one would expect in a more suburban or developed setting. It might be possible to use a simpler gate design and boulder bollards to reduce the cost of the access control measures and better maintain the rural character of the property.

Sheet SP9: On the trailhead sign (and signs B, D and F), it might be worth changing "Dispose of trash properly" to "Carry out all trash" to be clear about the expectation. Further, as a minor style point, change "Dogs must be leashed" to "Leash dogs at all times" so it's consistent with the statement about trash disposal.

As noted in the plan, the water quality certification requires the final plan be approved by DEC. Please forward a final version once you have incorporated the input you received on the draft.

BTF

Brian T. Fitzgerald

Vermont Agency of Natural Resources
Department of Environmental Conservation
Water Quality Division
103 South Main Street
Waterbury, VT 05671-0408

802.241.3468
802.793.0454 (cell)

brian.fitzgerald@state.vt.us
http://www.vtwaterquality.org

Conservation is a cause that has no end. There is no point at which we will say our work is finished.
- Rachel Carson

Please consider the environment before printing this e-mail

VERMONT

Vermont Department of Environmental Conservation *Agency of Natural Resources*
Water Quality Division
103 South Main Street, 10 North [phone] 802-241-3468
Waterbury, VT 05671-0408 [fax] 802-241-4537
http://www.vtwaterquality.org

DISTRIBUTED ELECTRONICALLY

February 24, 2010

Michael J. Scarzello, P.E.
Central Vermont Public Service Corporation
77 Grove Street
Rutland, VT 05701

RE: Carver Falls Hydroelectric Project – FERC No. 11475
Recreation Plan

Dear Mr. Scarzello:

Today, Gomez and Sullivan Engineers filed by e-mail, on behalf of Central Vermont Public Service Corporation, a revised recreation plan for the Carver Falls Hydroelectric Project. The plan is a revision of a draft filed for comment on January 15, 2010. The plan is subject to Department approval under Condition L of the water quality certification issued by the Department on December 5, 2008.

We appreciate CVPS working with us to revise the earlier draft of the plan and hereby grant the Department's approval.

Experience gained during plan implementation may suggest the need for future refinements. We will be happy to work collaboratively with CVPS if changes are necessary.

Please feel free to contact me if you should have any questions.

Very truly yours,

Brian T. Fitzgerald
Streamflow Protection Coordinator

c: Ethan Swift, VDEC
Jason George, Gomez & Sullivan